SOAP FILMS WITH GRAVITY AND ALMOST-MINIMAL SURFACES

F. MAGGI, A. SCARDICCHIO, AND S. STUVARD

Abstract. Motivated by the study of the equilibrium equations for a soap film hanging from a wire frame, we prove a compactness theorem for surfaces with asymptotically vanishing mean curvature and fixed or converging boundaries. In particular, we obtain sufficient geometric conditions for the minimal surfaces spanned by a given boundary to represent all the possible limits of sequences of almost-minimal surfaces. Finally, we provide some sharp quantitative estimates on the distance of an almost-minimal surface from its limit minimal surface.

Dedicated to Luis Caffarelli, on his 70th birthday

Contents

1. Introduction 1
2. Soap films with gravity 4
3. Almost-minimal surfaces 8
4. The compactness theorem 17
5. Sharp decay estimates 25
References 32

1. Introduction

In the study of soap films under the action of gravity, one is interested in surfaces with *small* but non-zero mean curvature spanned by a given boundary. Indeed, as explained in section 2 below, the mid-surface M of a film of thickness $2\,h > 0$ satisfies in first approximation the equilibrium condition

$$H_M(x) = -\kappa^2\, h\, \nu_M(x) \cdot e_3 + O(h^2) \qquad \forall x \in M\,, \tag{1.1}$$

where H_M is the mean curvature of M with respect to the unit normal ν_M, e_3 is the vertical direction, and κ^{-1} is the *capillary length* of the film, defined by

$$\kappa := \sqrt{\frac{g\,\rho}{\sigma}}\,. \tag{1.2}$$

Here, ρ is the volume density of mass for the film solution, σ denotes the surface tension of the film (with dimensions Newton per unit length), and g is the gravity acceleration on Earth. The interest for this equation lies in the fact that it correctly encodes several physical properties which are missed by the minimal surface equation $H_M = 0$, e.g. the fact that actual soap films cannot be formed under arbitrary large scalings of the boundary curve.

In this setting, the first question one wants to answer is whether minimal surfaces are a good model for their small mean curvature counterpart. In this paper, we provide a general sufficient condition on the boundary data to ensure the validity of this approximation. When the model minimal surface is smooth and strictly stable, we also provide quantitative estimates for almost-minimal surfaces in terms of their total mean curvature. Since formal

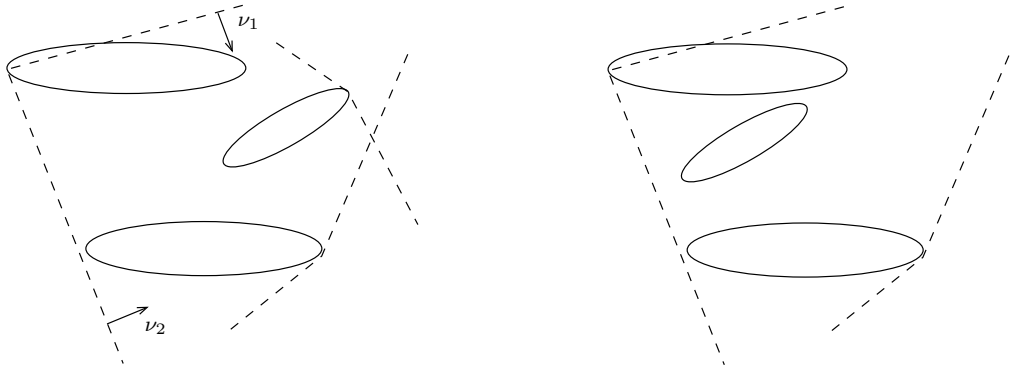

FIGURE 1.1. On the left, a boundary Γ, consisting of three circles, that is accessible from infinity. The acute wedges realizing the inclusions (1.3) are depicted by dashed lines. Notice that it is not necessary that Γ is contained into a convex set, or into a mean convex set, for the condition to hold. On the right, another set of circles defining a boundary Γ which does not satisfy accessibility from infinity. Indeed, there is no way to touch the smaller circle with an acute wedge containing the larger ones.

statements require the introduction of a few concepts from Geometric Measure Theory, we present for the moment just an informal and simplified version of our main results.

Theorem. *Let Γ be a compact, orientable $(n-1)$-dimensional surface without boundary in $\mathbb{R}^{n+1}$, and let $\{M_j\}_j$ be a sequence of compact, orientable n-dimensional surfaces in $\mathbb{R}^{n+1}$ with boundaries $\Gamma_j = f_j(\Gamma)$ for maps f_j converging in C^1 to the identity map, and such that (denoting by $\mathcal{H}^n$ the n-dimensional Hausdorff measure in $\mathbb{R}^{n+1}$),*

$$\sup_{j\in\mathbb{N}}\Big\{\max_{x\in M_j}|x|, \mathcal{H}^n(M_j)\Big\} < \infty\,, \qquad \lim_{j\to\infty}\int_{M_j}|H_{M_j}|\,d\mathcal{H}^n = 0\,.$$

Assume that Γ satisfies the following two properties:

Finiteness and regularity of the Plateau problem: *There are finitely many minimal surfaces $\{N_i\}_i$ spanned by Γ, possibly including in the count "singular" minimal surfaces, whose singularities are anyway located away from Γ.*

Accessibility from infinity: *For each connected component Γ' of Γ, the set of points $x \in \Gamma'$ such that, for some unit vectors ν_1 and ν_2 with $\nu_1 \cdot \nu_2 < 1$, the inclusion*

$$\Gamma \subset x + \Big\{y \in \mathbb{R}^{n+1} \,:\, y\cdot\nu_1 \geq 0\,, y\cdot\nu_2 \geq 0\Big\} \tag{1.3}$$

holds, is a set of positive $\mathcal{H}^{n-1}$-measure; see Figure 1.1.

Under these two assumptions, we have the following conclusions:

No-bubbling: *There exists a single minimal surface N_{i_0} spanned by Γ such that $M_j \to N_{i_0}$ as $j \to \infty$, in the sense that there exist open sets $\{E_j\}_j$ with smooth boundary such that*

$$\lim_{j\to\infty}|E_j| + \mathcal{H}^n\Big(\partial E_j \setminus (N_{i_0}\cup M_j)\Big) = 0\,.$$

Here $|E|$ denotes the $(n+1)$-dimensional volume of $E \subset \mathbb{R}^{n+1}$.

Strong convergence and sharp estimates: *If in addition $\Gamma_j = \Gamma$, N_{i_0} has no singularities, and N_{i_0} is strictly stable, in the sense that, for a positive constant λ,*

$$\int_{N_{i_0}}|\nabla\varphi|^2 - |A_{N_{i_0}}|^2\varphi^2 \geq \lambda\int_{N_{i_0}}\varphi^2 \qquad \forall\varphi\in H^1_0(N_{i_0})\,,$$

(where $|A_{N_{i_0}}|$ is the Hilbert-Schmidt norm of the second fundamental form of $N_{i_0} \hookrightarrow \mathbb{R}^{n+1}$), and if for some $p > n$ we have a uniform bound

$$\sup_{j \in \mathbb{N}_{i_0}} \int_{M_j} |H_{M_j}|^p \, d\mathcal{H}^n < \infty \,,$$

then there exist smooth functions $u_j : N_{i_0} \to \mathbb{R}$ with $u_j = 0$ on ∂N_{i_0} and $\|u_j\|_{C^1(N_{i_0})} \to 0$ as $j \to \infty$ such that

$$M_j = \Big\{ x + u_j(x)\, \nu_{N_{i_0}}(x) : x \in N_{i_0} \Big\} \,,$$

and the following sharp estimates hold:

$$\|u_j\|_{C^0(N_{i_0})} \le C \Big(\int_{M_j} |H_{M_j}|^p \Big)^{1/p} \,, \tag{1.4}$$

$$\max \Big\{ \mathcal{H}^n(M_j) - \mathcal{H}^n(N_{i_0}), \|u_j\|_{W^{1,2}(N_{i_0})} \Big\} \le C \Big(\int_{M_j} |H_{M_j}|^2 \Big)^{1/2} \,, \tag{1.5}$$

for a constant $C = C(N_{i_0}, p)$.

Remark 1.1. As shown by simple examples (see Figure 3.2), if accessibility from infinity fails then bubbling can occur in the convergence of $\{M_j\}_j$. In particular, $\{M_j\}_j$ could converge to a smooth minimal surface with multiplicity 2, and some pieces of the limiting minimal surface could not be part of any minimal surface spanned by the whole Γ.

Remark 1.2. In the case M_j is the boundary of an open set (and thus, necessarily, $\Gamma = \emptyset$), and M_j has *almost-constant* (non-zero) mean curvature, then the occurrence of bubbling is unavoidable, and its description has been undertaken in various papers, see e.g. [BC84, Str84, CM17, DMMN17, KM17, DM17]. From this point of view, the fact that we can avoid bubbling under somehow reasonable assumptions on the boundary data Γ is a remarkable rigidity feature of Plateau's problem.

Remark 1.3. The finiteness and regularity assumption is well-illustated in the case when Γ consists of two parallel unit circles in $\mathbb{R}^3$, having centers on a common axis. The idea here is that, depending on the distance between the circles, there should be at most five "generalized" minimal surfaces spanned by Γ (see Figure 3.1): two parallel disks, two catenoids (one stable, the other unstable), and two singular catenoids. Each singular catenoid is formed by attaching a smaller disk to two catenoidal necks so that the disk floats at mid distance from the two boundary circles, and the necks form three 120-degrees angles along the circle. Notice that the floating circle does not count as a boundary curve, but rather as a curve of "singular" points. Observe that accessibility from infinity trivially holds in this case, while the validity of the finiteness and regularity assumption (which is formally introduced in section 3.4) is not obvious, although it seems quite reasonable to expect it to be true. If that is the case, the compactness theorem indicates that a sequence of smooth almost-minimal surfaces spanned by Γ (or with boundaries converging to Γ) must converge to one of these five minimal surfaces, without bubbling. Actually, a simple additional argument can be used to exclude that the singular catenoids are possible limits, see Remark 4.1.

Remark 1.4. Both estimates (1.4) and (1.5) are sharp. When $p = \infty$, (1.4) generalizes to arbitrary minimal surfaces the fact that an almost-minimal surface bounded by a circle deviates from a flat disk at most linearly in the mean curvature times the area of the disk. The interest of (1.5) is that the L^2-norm of the mean curvature appears as the dissipation of the area along a mean curvature flow with prescribed boundary data, see for example Huisken [Hui89] and Spruck [Spr07]. Moreover, we notice the close relation between (1.5) and the main result from [DPM14], which addresses the problem of proving global stability inequalities for smooth, area-minimizing surfaces. Finally, we remark that the bound on

$\|H_{M_j}\|_{L^p(M_j)}$ for $p > n$ is needed to enforce the graphicality of M_j over N_{i_0} via Allard's regularity theorem. If one knows a priori that M_j is a graph over N_{i_0}, then (1.4) can be proved for every $p \geq 2$ with $p > n/2$ (for example, $p = 2$ works for two and three dimensional surfaces); see Theorem 5.1 in section 5 below.

The paper is organized as follows. In section 2 we discuss the equilibrium conditions for soap films with gravity, and derive (1.1) under appropriate conditions. An interesting outcome of this discussion is the idea, based on physical grounds, of formulating Plateau's problem **as a singular capillarity problem**. Section 3 consists in part of a preliminary review of the necessary concepts from Geometric Measure Theory, and in part of a precise formulation of our two main assumptions. In section 4 we give a precise statement and the proof of our main compactness result, see Theorem 4.1. Finally, in section 5, we explain the reduction to graph-like surfaces, and prove various sharp convergence estimates, see Theorem 5.1. These last results show that on graph-like surfaces one can work with a very weak notion of almost-minimality deficit, a fact that will likely prove useful in future investigations.

Acknowledgments. F.M. and S.S. have been supported by the NSF Grants DMS-1565354, DMS-1361122 and DMS-1262411.

2. Soap films with gravity

Due to gravitational forces, surfaces with small but non-zero mean curvature arise naturally in the study of soap films hanging on a wire. This effect is usually neglected in the mathematical literature, leading to an exclusive focus on minimal surfaces. The resulting model describes correctly the physical situation of small soap films. However, as noticed by Defay and Prigogine, "gravitational forces [...] play a dominant role in determining the shapes of *macroscopic* surfaces"; see [DP66, Section I-4]. The typical length scale which separates small films from large films is given by the capillary length $\kappa^{-1} = \sqrt{\sigma/\rho g}$, introduced in (1.2). For a solution of soap in water at room temperature, the values of the surface tension and of the density are, respectively, $\sigma \simeq 0.03\text{N/m}$ and $\rho \simeq 10^3\text{kg/m}^3$, while $g \simeq 9.81\text{N/kg}$ is Earth's gravity, so that the length-scale κ^{-1} is of order of 1.7mm. The deviation of a soap film with gravity from its limit minimal surface is expected to be $O(h\,\kappa)$ where h is the average width of the film. For typical soap films, we are in the perturbative region, since we usually have $h \simeq 10^{-3}\text{mm} \simeq 10^{-3}\kappa^{-1}$.

Idealizing the wire frame as a smooth curve Γ without boundary in $\mathbb{R}^3$, and the soap film as a smooth surface M bounded by Γ, if we neglect gravity then we are led to modeling soap films as minimal surfaces, i.e. surfaces with vanishing mean curvature

$$H_M = 0\,. \tag{2.1}$$

This condition is derived from balancing the atmospheric pressures on the two sides of the film with the *Laplace pressure* induced by surface tension [You05, Lap06]. Denoting by σ the surface tension, if S is a small neighborhood of $x \in M$, with outer unit co-normal ν_S^M with respect to M, then the tension on S is given by

$$\sigma \int_{\partial S} \nu_S^M = \sigma \int_S \mathbf{H}_M\,. \tag{2.2}$$

Here, $\mathbf{H}_M$ denotes the mean curvature vector to M, which, once the choice of a unit normal ν_M to M is specified, defines a scalar mean curvature H_M appearing in (2.1) through the equation $\mathbf{H}_M = H_M\,\nu_M$. If the atmospheric pressures on the two sides of the film are assumed to be equal, as it is the case if we ignore gravity, then the Laplace pressure must vanish, and we find (2.1). Let us recall that (2.1) can also be derived by the principle of

virtual works, as first done by Gauss [Gau30], by taking as the total energy of the film the area of M times σ, namely

$$\mathcal{E}(M) = \sigma\, \mathcal{H}^2(M)\,. \tag{2.3}$$

Equation (2.1) fails in describing macroscopic soap films in two ways:

(i) For a given contour Γ, the minimal surfaces spanned by $t\,\Gamma$, for a scaling factor $t > 1$, are simply obtained by scaling the minimal surfaces spanned by Γ. This is evidently not the case for real soap films, where there is a competition between the capillary length κ^{-1} and the length-scale of the boundary curve Γ in determining if a soap film is produced at all. From this point of view, $H_M = 0$ fails completely at describing the macroscopic length-scales at which soap films are actually formed. Equation (1.1), namely $H_M = -\kappa^2\, h\, \nu_M \cdot e_3 + O(h^2)$, does not have this problem. Indeed, the solvability of a prescribed mean curvature equation $H_M = f$ with $\partial M = \Gamma$ requires a control on the size of f in terms, for example, of $\mathcal{H}^2(M_\Gamma)^{-1/2}$, where M_Γ is the area-minimizing surface spanned by Γ; see, e.g., the papers by Duzaar and Fuchs [DF90, DF92]. In particular, the solvability of (1.1) with boundary condition $\partial M = \Gamma$ depends on the relative sizes of $\kappa^2\, h$ (which measures the physical properties of the soap solution) and of the length-scale of Γ.

(ii) Equation (2.1) is invariant under rotations, while the effect of gravity is definitely anisotropic. For example, a soap film M hanging from a circular frame Γ of radius r should be exactly a flat disk if Γ is contained in a vertical plane, whereas it should possess a non-trivial curvature if Γ is in horizontal position, with average vertical deviation from the flat disk of order $r^2\, H_M$. This deviation is observable depending on the length scale of Γ and on κ. In the case of soap *bubbles*, where $H_M = 0$ is replaced by H_M constant, a deviation is experimentally observed and is substantial; see [CDTR$^+$17, Figures 1 and 3]. The presence of the vertical component of ν_M makes indeed (1.1) anisotropic, and, actually, (1.1) boils down to (2.1) only if M is contained in a vertical plane.

In [DP66, Section I.4], Defay and Prigogine explain how the effect of gravity should be modeled by balancing pressures. One needs to consider the finite thickness of the film, bounded by two different interfaces, and to take into account the difference in hydrostatic pressures on the two faces caused by the gravitational pull. We now put into equations this idea, and formulate a PDE for the problem. The resulting PDE, see (2.7), justifies (1.1), which, in turn, appears in the literature when M is axially symmetric and very close (in a C^1-sense) to a plane; see e.g. [dGBWQ03, Equation (2.5)].

Consider a smooth two-dimensional surface M bounded by a smooth curve Γ in $\mathbb{R}^3$, and oriented by a unit normal ν_M. Here M plays the role of an ideal surface lying inside the film. Given a smooth function α defined on M, we denote its graph over M by

$$M(\alpha) := \Big\{ x + \alpha(x)\, \nu_M(x) : x \in M \Big\}\,.$$

The two interfaces of the soap film are described by graphs $M(\alpha)$ and $M(-\beta)$ for positive functions α and β. Up to replacing M with $M((\alpha-\beta)/2)$, and then setting $\psi := (\alpha+\beta)/2$, we can actually assume that the interfaces are $M(\psi)$ and $M(-\psi)$, where ψ is a smooth positive function on M. However, it does not seem that the symmetric parametrization is always the most convenient, so we shall argue in terms of α and β.

Given $x \in M$, and with reference to Figure 2.1, at equilibrium, the pressure $p(x^+)$ at $x^+ := x + \alpha(x)\, \nu_M(x) \in M(\alpha)$ is given by

$$p(x^+) = p_0 + \sigma\, H_{M(\alpha)}(x^+)\,, \tag{2.4}$$

where $H_{M(\alpha)}$ is the scalar mean curvature of $M(\alpha)$ with respect to the unit normal pointing *outside* the film, p_0 is the atmospheric pressure, and σ is the surface tension. The pressure $p(x^-)$ at $x^- := x - \beta(x)\, \nu_M(x) \in M(-\beta)$ is similarly given by

$$p(x^-) = p_0 + \sigma\, H_{M(-\beta)}(x^-)\,, \tag{2.5}$$

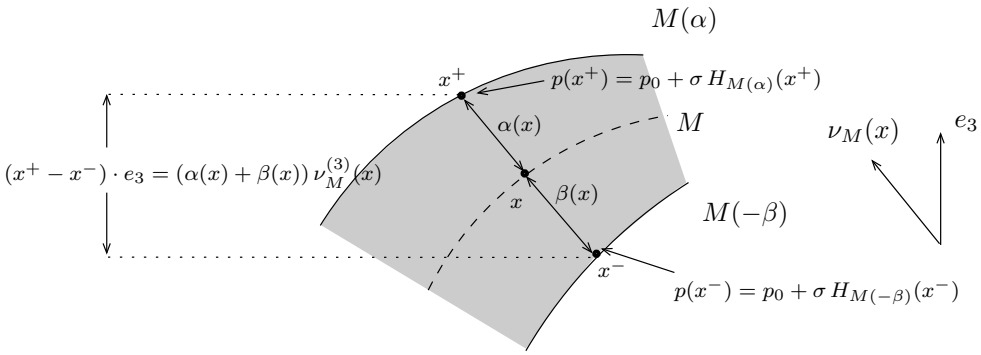

FIGURE 2.1. The derivation of (2.7), after [DP66, Section I.4].

where $H_{M(-\beta)}$ is the scalar mean curvature of $M(-\beta)$ with respect to the unit normal pointing *outside* of the film. Subtracting the two equations, we obtain

$$H_{M(\alpha)}(x^+) - H_{M(-\beta)}(x^-) = \frac{p(x^+) - p(x^-)}{\sigma}\,.$$

On the other hand, the difference between $p(x^-)$ and $p(x^+)$ is the hydrostatic pressure

$$\begin{aligned} &p(x^-) - p(x^+) = g\,\rho\,(x^+ - x^-)\cdot e_3 = g\,\rho\,(\alpha(x) + \beta(x))\,\nu_M^{(3)}(x)\,, \\ &\text{where} \quad \nu_M^{(3)} := \nu_M \cdot e_3\,. \end{aligned} \tag{2.6}$$

Combining (2.4), (2.5) and (2.6) we obtain the equation for minimal surfaces with gravity

$$H_{M(\alpha)}(x^+) - H_{M(-\beta)}(x^-) = -\kappa^2\,(\alpha(x) + \beta(x))\,\nu_M^{(3)}(x)\,, \qquad \forall x \in M\,. \tag{2.7}$$

If $|\nabla\alpha|$ and $|\nabla\beta|$ are sufficiently small at x, and we consider the mid-surface parametrization, then we can assume that locally $\alpha \equiv \beta \equiv h$, where h is a small positive constant. Denoting by $\{\kappa_1, \kappa_2\}$ the principal curvatures of M, and stressing the smallness of h by requiring $0 < h < \max\{|\kappa_1|, |\kappa_2|\}^{-1}$, we thus obtain

$$\begin{aligned} H_{M(\alpha)}(x^+) &= \sum_{i=1}^{2} \frac{\kappa_i(x)}{1 + h\,\kappa_i(x)} = H_M(x) - h\sum_{i=1}^{2}\kappa_i^2 + O(h^2)\sum_{i=1}^{2}\kappa_i^3\,, \\ H_{M(-\beta)}(x^-) &= -\sum_{i=1}^{2} \frac{\kappa_i(x)}{1 - h\,\kappa_i(x)} = -H_M(x) - h\sum_{i=1}^{2}\kappa_i^2 + O(h^2)\sum_{i=1}^{2}\kappa_i^3\,, \end{aligned}$$

and (2.7) is readily seen to imply

$$H_M(x) = -\kappa^2\,h\,\nu_M^{(3)}(x) + O(h^2) \qquad \forall x \in M\,,$$

that is, (1.1).

We now explain how (2.7) can be derived from energy considerations. The idea is treating the problem of a soap film hanging from a wire frame as a capillarity problem. We model the wire frame as a solid δ-neighborhood of an idealized curve Γ, setting

$$\Gamma_\delta := \Big\{x \in \mathbb{R}^3 : \mathrm{dist}(x, \Gamma) \le \delta\Big\}\,, \qquad A_\delta := \mathbb{R}^3 \setminus \Gamma_\delta\,.$$

We model the soap film as a set $E \subset A_\delta$ with very small volume $\varepsilon = |E|$, and, following Gauss' treatment of capillarity theory, we define its energy as

$$\mathcal{E}(E) = \sigma\,\mathcal{H}^2\big(A_\delta \cap \partial E\big) + \sigma\,\gamma\,\mathcal{H}^2(\partial A_\delta \cap \partial E) + g\,\rho\int_E x_3\,dx\,,$$

see Figure 2.2. Here $\gamma \in (-1, 1)$ is a dimensionless parameter taking into account the ratio between the surface tension on the liquid-air interface, and the surface tension on

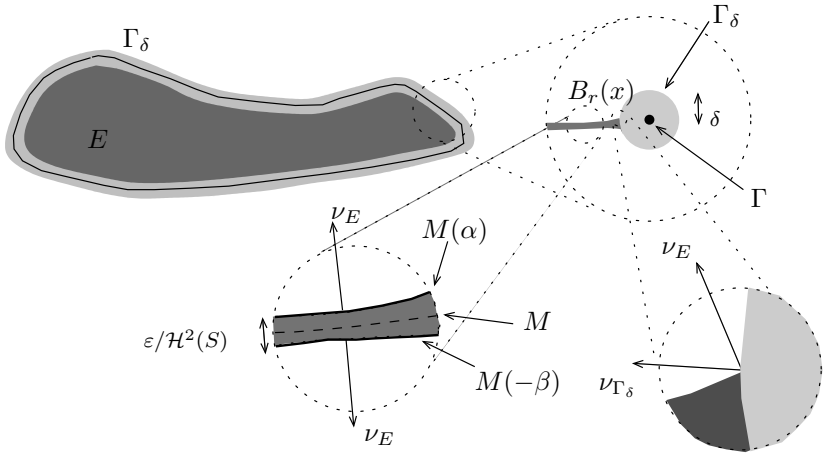

FIGURE 2.2. Using Gauss' capillarity energy to formulate Plateau's problem. Minimization of $\sigma\,\mathcal{H}^2(M)$ among surfaces with $\partial M = \Gamma$ is replaced by minimizing the capillarity energy among regions contained in the complement of a δ-neighborhood of Γ. Equilibrium configurations with volume $\varepsilon \ll \delta\,\mathcal{H}^2(S) \ll 1$ arise as normal neighborhoods of minimal surfaces spanned by Γ. Here S denotes the boundary of E away from the wire frame.

the liquid-solid interface along the wire frame walls. Assuming that E is a smooth critical point of this energy, the Euler-Lagrange equations boil down to the equilibrium condition

$$\sigma\,H_E(y) + \rho\,g\,y_3 = \lambda \qquad \forall y \in S = A_\delta \cap \partial E\,, \tag{2.8}$$

where H_E denotes the scalar mean curvature of ∂E with respect to the *outer* unit normal to E, and λ is a Lagrange multiplier associated to the volume constraint. Equation (2.8) is coupled with *Young's law*,

$$\nu_E(y) \cdot \nu_{\Gamma_\delta}(y) = \gamma \qquad \forall y \in \overline{S} \cap \partial A_\delta\,. \tag{2.9}$$

Under the assumption that

$$\frac{\varepsilon}{\mathcal{H}^2(S)} \ll \delta$$

and that δ is sufficiently small in terms of the local and global geometric properties of Γ, it is reasonable to expect the existence of critical points E described by means of mid-surfaces M spanned by Γ. More precisely, we consider critical points E corresponding to surfaces M with $\partial M = \Gamma$ in the sense that, for every $x \in M \cap A_\delta$ we can find $r > 0$ such that

$$E \cap B_r(x) = \Big\{ z + t\,\nu_M(z) : z \in M\,, -\beta(z) < t < \alpha(z) \Big\}\,.$$

In this case, (2.8) computed at $y = x + \alpha(x)\,\nu_M(x) = x^+$ and at $y = x - \beta(x)\,\nu_M(x) = x^-$ gives

$$\sigma\,H_{M(\alpha)}(x^+) + \rho\,g\,x^+ \cdot e_3 = \lambda\,, \qquad \sigma\,H_{M(-\beta)}(x^-) + \rho\,g\,x^- \cdot e_3 = \lambda\,. \tag{2.10}$$

Notice that our sign conventions on scalar mean curvatures have been such that $H_E(x^+) = H_{M(\alpha)}(x^+)$ and $H_E(x^-) = H_{M(-\beta)}(x^-)$. Subtracting the two equations we deduce indeed the validity of (2.7) as a consequence of the equilibrium condition for Gauss' capillarity energy. Notice that the full set of equilibrium conditions is expressed by considering Young's law together with the two equations (2.10), or with the single equation (2.8), rather than by (2.7) alone. Here the role of (2.7) is stressed because, as explained above, it clearly motivates the study of surfaces with small mean curvature.

In summary, we have seen in this section how surfaces with prescribed boundary and small mean curvature, such as the ones described by equation (2.7), or by its approximation (1.1), arise naturally in the study of soap films hanging from a wire. More generally, the use of capillarity theory to model soap films provides an additional, more physical, point of view on the long-debated issue of prescribing boundary data in the mathematical formulation of Plateau's problem; see [Har04, Dav14, HP16, DPDRG16, DLGM17, GLF17, DLDRG17, ABP17, FK18, DR18] for the most recent developments on this venerable question. Leaving a more complete discussion of this last point to a forthcoming paper, we focus here on a first problem raised by this approach, namely understanding the relation between almost-minimal and minimal surfaces.

3. Almost-minimal surfaces

Let Γ be a compact $(n-1)$-dimensional surface in $\mathbb{R}^{n+1}$ without boundary. Motivated by the study of surfaces obeying (1.1), we now consider the general question of understanding the relation between the minimal and the almost minimal surfaces spanned by Γ. The question we want to address is the following:

$$\begin{aligned}&\text{In the class of surfaces spanned by } \Gamma\\&\text{is the family of minimal surfaces rich enough}\\&\text{to describe all the possible limits of almost-minimal surfaces?}\end{aligned} \tag{3.1}$$

Theorem 4.1 answers affirmatively to this question under the assumptions that Γ is accessible from infinity and spans finitely many minimal surfaces without boundary singularities. The statement of the theorem is actually quite delicate, as it involves several choices and assumptions. In the following paragraphs we shall address these points. In § 3.1 we propose various ways of measuring the almost-minimality of a surface, while in § 3.2 we review two notions of convergence for smooth surfaces arising in Geometric Measure Theory. In § 3.3 we discuss our geometric assumption on the connected components of Γ, and in § 3.4 we make precise the idea that Γ spans at most finitely many minimal surfaces.

3.1. **Measuring almost-minimality.** Directly motivated by the equation for minimal surfaces with gravity (1.1), we shall consider the **uniform deficit**

$$\delta_\infty(M) := \|H_M\|_{C^0(M)}$$

as our chief option to measure almost-minimality. But depending on other possible applications of almost-minimal surfaces, the family of **integral deficits**

$$\delta_p(M) := \|H_M\|_{L^p(M)}\,, \qquad 1 \le p < \infty\,,$$

may be more relevant. For example, $\delta_2(M)$ definitely plays a role in the study of the gradient flow defined by Plateau's problem, see [Hui89, Spr07]. At the weaker end of the spectrum, and closer to the point of view usually adopted when discussing Paley-Smale sequences in variational problems, one may consider the **duality deficits**

$$\delta_{-p}(M) := \sup\Big\{ \int_M \operatorname{div}^M X \, d\mathcal{H}^n : X \in C^1_c(\mathbb{R}^{n+1} \setminus \Gamma; \mathbb{R}^{n+1})\,, \|\nabla X\|_{L^p(\mathbb{R}^{n+1})} \le 1 \Big\}\,,$$

for $1 \le p \le \infty$. This last definition is motivated by the tangential divergence theorem, stating that if M is a smooth compact n-dimensional surface with boundary Γ, then

$$\int_M \operatorname{div}^M X \, d\mathcal{H}^n = \int_M X \cdot \mathbf{H}_M \, d\mathcal{H}^n + \int_\Gamma X \cdot \nu^M_\Gamma \, d\mathcal{H}^{n-1} \qquad \forall X \in C^1_c(\mathbb{R}^{n+1}; \mathbb{R}^{n+1})\,. \tag{3.2}$$

Here ν^M_Γ is outer unit co-normal to Γ with respect to M, and $\operatorname{div}^M X$ is the tangential divergence of X with respect to M, that is

$$\operatorname{div}^M X(x) := \operatorname{div} X(x) - \nu_M(x) \cdot \nabla X(x)[\nu_M(x)] \qquad \forall x \in M\,. \tag{3.3}$$

An interesting fact is that on surfaces M that are a priori known to be graphs over strictly stable minimal surfaces, the duality deficit $\delta_{-\infty}(M)$ already controls the area deficit, see Theorem 5.1.

3.2. **Convergence of smooth surfaces.** In order to provide a better insight into question (3.1), we need to discuss possible notions of limit for a sequence of smooth surfaces. To introduce the relevant ideas, let us consider a sequence $\{M_j\}_j$ of smooth oriented n-dimensional surfaces such that

$$\partial M_j = \Gamma\,, \qquad \sup_j \mathcal{H}^n(M_j) < \infty\,, \qquad \sup_j \sup_{x\in M_j} |x| < \infty\,, \qquad \lim_{j\to\infty} \delta_\infty(M_j) = 0\,. \tag{3.4}$$

Geometric Measure Theory provides two canonical ways to discuss the convergence of such a sequence $\{M_j\}_j$. Both approaches require the identification of each M_j as a linear functional on a space of test functions, or, equivalently, as a Radon measure on a suitable finite dimensional space. The first approach, the theory of currents, allows to transfer the spanning information $\partial M_j = \Gamma$ to a generalized limit surface. The second approach, the theory of varifolds, allows to infer from $\delta_\infty(M_j) \to 0$ the existence of a limit surface that is minimal, again in a generalized sense. A subtlety lies in the fact that the generalized limit surface in the varifold sense may be larger that its counterpart in the sense of currents.

The viewpoint of currents. We see each oriented surface M_j in (3.4) as a linear continuous functional $[\![M_j]\!]$ on the space $\mathscr{D}^n(\mathbb{R}^{n+1})$ of smooth, compactly supported n-dimensional differential forms, equipped with the standard topology of test functions. More precisely, if M_j is oriented by a continuous choice of a unit normal vector field ν_{M_j}, we set

$$\langle [\![M_j]\!], \omega\rangle := \int_{M_j} \langle \star\nu_{M_j}(x), \omega(x)\rangle \, d\mathcal{H}^n(x) \qquad \forall \omega \in \mathscr{D}^n(\mathbb{R}^{n+1})\,,$$

where, given $\nu \in \mathbb{S}^n$, $\star\nu$ denotes the simple unit n-vector corresponding to the n-dimensional plane $\nu^\perp$ oriented by ν, and the duality between n-vectors and n-covectors appears under the integral. Let us recall that $\star\nu_{M_j}$ induces a smooth orientation τ_Γ on Γ (that is, a smooth field of simple unit $(n-1)$-vectors defining and orienting the tangent planes to Γ) in such a way that Stokes' theorem holds

$$\int_{M_j} \langle \star\nu_{M_j}, d\omega\rangle \, d\mathcal{H}^n = \int_\Gamma \langle \tau_\Gamma, \omega\rangle \, d\mathcal{H}^{n-1} \qquad \forall \omega \in \mathscr{D}^{n-1}(\mathbb{R}^{n+1})\,, \tag{3.5}$$

where $d\omega$ is the exterior differential of the $(n-1)$-form ω. In this setting, it is quite natural to define the "boundary" of $[\![M_j]\!]$ as the linear continuous functional defined on $\mathscr{D}^{n-1}(\mathbb{R}^{n+1})$ by setting

$$\langle \partial[\![M_j]\!], \omega\rangle := \langle [\![M_j]\!], d\omega\rangle \qquad \forall \omega \in \mathscr{D}^{n-1}(\mathbb{R}^{n+1})\,. \tag{3.6}$$

Of course, Stokes' theorem (3.5) implies that if Γ is oriented by the orientation τ_Γ induced by the choice of ν_{M_j} then

$$\partial[\![M_j]\!] = [\![\Gamma]\!]\,.$$

The second and the third condition in (3.4) and the compactness theorem for Radon measures imply the existence of a linear continuous functional T on $\mathscr{D}^n(\mathbb{R}^{n+1})$ such that, up to extracting subsequences,

$$\langle T, \omega\rangle = \lim_{j\to\infty} \int_{M_j} \langle \star\nu_{M_j}, \omega\rangle \, d\mathcal{H}^n \qquad \forall \omega \in \mathscr{D}^n(\mathbb{R}^{n+1})\,. \tag{3.7}$$

Is the linear functional T still represented by the action on forms of an oriented surface with boundary, like the functionals $[\![M_j]\!]$ are? A deep theorem of Federer and Fleming [FF60] gives a positive answer, provided that we introduce a suitable class of generalized surfaces with boundary. The key notion here is that of a *rectifiable set*. We say that a Borel set $N \subset \mathbb{R}^{n+1}$ is **locally $\mathcal{H}^n$-rectifiable** if, up to a $\mathcal{H}^n$-null set, N can be covered

by countably many Lipschitz images of $\mathbb{R}^n$ into $\mathbb{R}^{n+1}$, and if $\mathcal{H}^n(N \cap B_R) < \infty$ for every $R > 0$. If N is locally $\mathcal{H}^n$-rectifiable, then N has a tangent plane almost-everywhere, in the sense that for $\mathcal{H}^n$-a.e. $x \in N$ there exists an n-dimensional linear subspace $T_x N \subset \mathbb{R}^{n+1}$ such that

$$\lim_{r \to 0^+} \int_{(N-x)/r} \varphi \, d\mathcal{H}^n = \int_{T_x N} \varphi \, d\mathcal{H}^n \qquad \forall \varphi \in C^0_c(\mathbb{R}^{n+1}) \,. \tag{3.8}$$

We can thus define a Borel vector field ν_N on N such that $\nu_N(x)^\perp = T_x N$ at $\mathcal{H}^n$-a.e. $x \in N$. Analogously to the smooth setting, such a vector field ν_N will be called an *orientation* of the rectifiable set N. Coming back to (3.7), the Federer–Fleming compactness theorem shows the existence of a locally $\mathcal{H}^n$-rectifiable set N, of a Borel measurable orientation ν_N, and of a function $\alpha \in L^1_{loc}(\mathcal{H}^n \llcorner N; \mathbb{Z})$ (an integer-valued *multiplicity* on N) such that $T = [\![N, \star\nu_N, \alpha]\!]$, i.e.

$$\langle T, \omega \rangle = \int_N \alpha(x) \, \langle \star\nu_N(x), \omega(x) \rangle \, d\mathcal{H}^n(x) \qquad \forall \omega \in \mathscr{D}^n(\mathbb{R}^{n+1}) \,. \tag{3.9}$$

Moreover, as a simple by-product of (3.6), we see that the limit current T has still boundary Γ, in the sense that $\partial T = [\![\Gamma]\!]$, or, more explicitly:

$$\langle T, d\omega \rangle = \langle [\![\Gamma]\!], \omega \rangle \qquad \forall \omega \in \mathscr{D}^{n-1}(\mathbb{R}^{n+1}) \,. \tag{3.10}$$

The viewpoint of varifolds. The next question is if the rectifiable set N, found by taking the limit of $\{M_j\}_j$ in the sense of currents, is minimal, at least in some generalized sense. The starting point is the tangential divergence theorem applied on M_j to fields supported away from Γ, which yields

$$\int_{M_j} \operatorname{div}^{M_j} X \, d\mathcal{H}^n = \int_{M_j} X \cdot \mathbf{H}_{M_j} \, d\mathcal{H}^n \qquad \forall X \in C^1_c(\mathbb{R}^{n+1} \setminus \Gamma; \mathbb{R}^{n+1}) \,. \tag{3.11}$$

Notice that, since $\delta_\infty(M_j) \to 0$, the right-hand side of (3.11) converges to zero as $j \to \infty$. To pass to the limit on the left-hand side we adopt the following point of view. Let us set

$$G^n := \mathbb{R}^{n+1} \times (\mathbb{S}^n / \equiv) \,,$$

where $\nu_1 \equiv \nu_2$ if and only if $\nu_1 = \pm\nu_2$, and denote by $[\nu]$ the $\equiv$-equivalence class of $\nu \in \mathbb{S}^n$. The point $(x, [\nu]) \in G^n$ identifies the (unoriented) n-dimensional affine plane orthogonal to ν and passing through x in $\mathbb{R}^{n+1}$. Given $X \in C^1_c(\mathbb{R}^{n+1}; \mathbb{R}^{n+1})$ we can define

$$\varphi_X \in C^0_c(G^n)$$

by setting

$$\varphi_X(x, [\nu]) := \operatorname{div} X(x) - \nu \cdot \nabla X(x) \nu \qquad (x, [\nu]) \in G^n \,.$$

The definition is well-posed, as the right-hand side is invariant when exchanging ν with $-\nu$. In this way

$$\int_{M_j} \operatorname{div}^{M_j} X \, d\mathcal{H}^n = \langle \mathbf{var}\,(M_j), \varphi_X \rangle$$

if we agree to associate every smooth surface M with a linear functional $\mathbf{var}\,(M)$ on $C^0_c(G^n)$ by setting

$$\langle \mathbf{var}\,(M), \varphi \rangle := \int_M \varphi(x, [\nu_M(x)]) \, d\mathcal{H}^n(x) \qquad \forall \varphi \in C^0_c(G^n) \,. \tag{3.12}$$

Notice that M does not need to be orientable here, as we are considering $[\nu_M(x)]$ in (3.12). Clearly, $\mathbf{var}\,(M)$ can be seen as a Radon measure on G^n, with total mass equal to $\mathcal{H}^n(M)$. Thus, under the assumptions in (3.4), $\{\mathbf{var}\,(M_j)\}_j$ is a bounded sequence of Radon measures with uniformly bounded supports, so that the standard compactness

theorem for Radon measures ensures the existence of a Radon measure V on G^n such that, up to extracting subsequences,

$$\langle V, \varphi \rangle = \lim_{j\to\infty} \int_{M_j} \varphi(x, [\nu_{M_j}(x)])\, d\mathcal{H}^n(x) \qquad \forall \varphi \in C^0_c(G^n)\,. \tag{3.13}$$

Given that $\delta_\infty(M_j) \to 0$, the above argument shows that $\langle V, \varphi_X \rangle = 0$ for every X compactly supported in the complement of Γ. We then ask the question whether the varifold V can be associated to a generalized surface, and to what extent this surface is minimal. Another deep theorem, this time due to Allard [All72], provides the following answer: there exists a locally $\mathcal{H}^n$-rectifiable set N and a function $\theta \in L^1_{loc}(\mathcal{H}^n \llcorner N; \mathbb{N})$ (a non-negative integral *multiplicity* on N) such that V is represented by N and θ, in symbols $V = \mathbf{var}\,(N, \theta)$, in the sense that

$$\langle V, \varphi \rangle = \langle \mathbf{var}\,(N, \theta), \varphi \rangle = \int_N \theta(x)\, \varphi(x, [\nu_N(x)])\, d\mathcal{H}^n(x) \qquad \forall \varphi \in C^0_c(G^n)\,. \tag{3.14}$$

As noticed, under the assumption (3.4), we have $\langle V, \varphi_X \rangle = 0$ whenever $\mathrm{spt} X \cap \Gamma = \emptyset$. In other words, the varifold $V = \mathbf{var}\,(N, \theta)$ is *minimal* on $\mathbb{R}^{n+1} \setminus \Gamma$ (or *stationary*, in the common terminology of Geometric Measure Theory), in the sense that

$$\int_N \theta\, \mathrm{div}^{\,N} X\, d\mathcal{H}^n = 0 \qquad \forall X \in C^1_c(\mathbb{R}^{n+1} \setminus \Gamma; \mathbb{R}^{n+1})\,. \tag{3.15}$$

Two remarks are in order: (i) The rectifiable set N arising in the varifold convergence is in general *larger* than the rectifiable set N obtained by taking the limit of $\{M_j\}_j$ in the sense of currents. The typical example is obtained by considering $M_j = B_1 \cap (K/j)$ (for $j \to \infty$) where K is a fixed catenoid. In this case the limit in the sense of currents is trivial, $N = \emptyset$, because the two sheets of the catenoid cancel out in the limit due to their opposite orientations; at the same time, if the limit is taken in the sense of varifolds, N is equal to a unit disk with multiplicity $\theta = 2$. For an example with fixed boundary data, see Example 3.4 below. From this point of view, answering question (3.1) partly amounts to *determine conditions under which this ambiguity between the two limits, one taken in the sense of currents and the other in the sense of varifolds, does not occur*; (ii) Coming back to the generalized minimal surface condition (3.15), in the next classical example we notice how this condition allows one to include in the theory of minimal surfaces non-smooth examples that are actually physically relevant.

Example 3.1. Let $\Gamma = \Gamma_1 \cup \Gamma_2$ be given by two parallel circles in $\mathbb{R}^3$ with centers on a same axis. We can construct generalized minimal surfaces on $\mathbb{R}^3 \setminus \Gamma$ as multiplicity one varifolds $\mathbf{var}\,(N_i) := \mathbf{var}\,(N_i, 1)$, associated to the rectifiable sets

$$N_1 := D_1 \cup D_2\,, \qquad N_2 := K_3\,, \qquad N_3 := K_4\,,$$
$$N_4 := K_5 \cup K_6 \cup D_7\,, \quad N_5 = K_8 \cup K_9 \cup D_{10}\,,$$

depicted in Figure 3.1, and referring to the following list of connected minimal surfaces:

D_1 and D_2 are two disks spanned by Γ_1 and Γ_2 resp. ;

K_3 and K_4 are the catenoids (one stable, the other unstable) spanned by Γ ;

K_5 and K_6 are two catenoids meeting at a $2\pi/3$-angle along a circle Γ_3 lying on the midplane between Γ_1 and Γ_2, centered along the same axis ;

D_7 is the disk spanned by Γ_3 ;

K_8 and K_9 are another pair of catenoids meeting at a $2\pi/3$-angle along a circle Γ_4 lying on the midplane between Γ_1 and Γ_2, centered along the same axis, with the radius of Γ_4 smaller than the radius of Γ_3;

D_{10} is the disk spanned by Γ_4 .

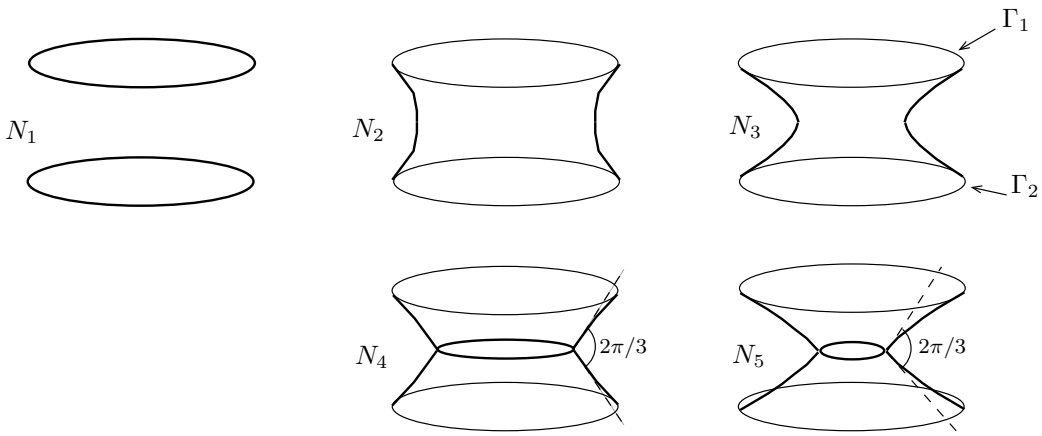

FIGURE 3.1. When Γ consists of two parallel disks there are, in addition to the disconnected surface defined by two disks, four minimal surfaces, two of them singular, all composed by joining pieces of catenoids.

We claim that the $\mathbf{var}\,(N_i)$'s are generalized minimal surfaces. Since N_4 and N_5 are not smooth, we need to check carefully if they satisfy (3.15). By applying the tangential divergence theorem separately on the three minimal surfaces K_5, K_6 and D_7, we find that

$$\int_{N_4} \operatorname{div}^{N_4} X \, d\mathcal{H}^2 = \int_{\Gamma_3} X \cdot \left(\nu_{\Gamma_3}^{K_5} + \nu_{\Gamma_3}^{K_6} + \nu_{\Gamma_3}^{D_7}\right) d\mathcal{H}^1 \,.$$

The sum of the above three co-normals is identically zero by the $2\pi/3$-angle condition imposed on K_6 and K_7, and so (3.15) holds, thus showing that N_4 is minimal. The minimality of N_5 follows analogously. We also notice that every integer valued combination

$$V = \sum_{i=1}^{5} q_i \, \mathbf{var}\,(N_i) \qquad \text{for some } q_i \in \mathbb{N} \tag{3.16}$$

satisfies (3.15), and is thus a possible limit for a sequence $\{M_j\}_j$ satisfying (3.4) with $\Gamma = \Gamma_1 \cup \Gamma_2$. If such a limit arises with $\sum_i q_i \geq 2$, we speak of **bubbling**. In fact, an additional subtlety lies in the fact that varifolds of the form

$$V = q_{1,1} \, \mathbf{var}\,(D_1) + q_{1,2} \, \mathbf{var}\,(D_2) + \sum_{i=2}^{5} q_i \, \mathbf{var}\,(N_i) \qquad \text{with } q_{1,1} \neq q_{1,2} \tag{3.17}$$

satisfy (3.15), and thus can arise as limits of almost-minimal surfaces (and indeed do so, see Example 3.5 below, if the mean curvature deficit is sufficiently weak). A limit like (3.17) is qualitatively worse than a limit of the form (3.16), in the sense that D_1 and D_2 alone do not span the whole Γ, but just some of its connected components.

3.3. **A geometric assumption: accessibility from infinity.** Given $x \in \Gamma$, we say that Γ is **accessible from infinity at** x if there exist a unit vector e and an angle $\theta \in [0, \pi)$ such that

$$\Gamma^{\mathrm{co}} \subset x + \left\{ z \in \mathbb{R}^{n+1} : z \cdot e \geq \frac{|z - (z \cdot e)e|}{\tan(\theta/2)} \right\}, \tag{3.18}$$

where Γ^{co} denotes the convex envelope of Γ. Notice that if (3.18) holds at a given x then every minimal surface N spanned by Γ is automatically contained in the wedge centered at x which appears on the right hand side of (3.18).

Definition 3.2. We say that Γ is **accessible from infinity** if, for each connected component Γ_m of Γ, the set of points $x \in \Gamma_m$ such that Γ is accessible from infinity at x has *positive* $\mathcal{H}^{n-1}$-measure.

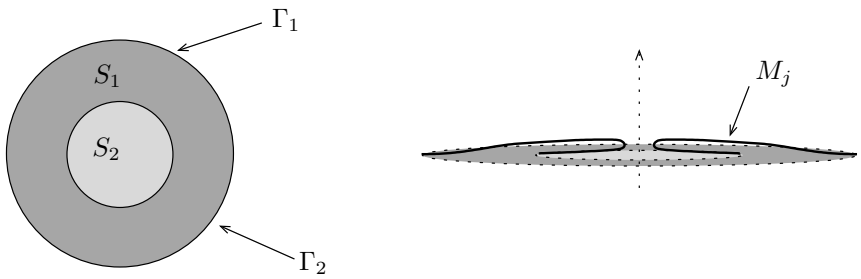

FIGURE 3.2. The construction described in Example 3.4.

Remark 3.3. (i) Notice that Γ does not need to be accessible at each of its points, we are just requiring that points of access have positive $\mathcal{H}^{n-1}$-measure inside each connected component of Γ; (ii) if Γ is contained in the boundary of a uniformly convex set $K \subset \mathbb{R}^{n+1}$, then Γ is accessible from infinity; the two conditions, on the other hand, are by no means equivalent, recall Figure 1.1.

Without Γ being accessible we can easily construct examples where question (3.1) has negative answer, even if we intend almost-minimality in the strongest form defined by the uniform deficit.

Example 3.4 (Negative answer to (3.1) and bubbling with uniform deficit)**.** Consider two concentric disks S_1 and S_2 contained inside a same plane, and bounded by circles Γ_1 and Γ_2, see Figure 3.2. Set $\Gamma = \Gamma_1 \cup \Gamma_2$, so that $N = S_1 \setminus \mathrm{int}(S_2)$ is definitely a minimal surface spanned by Γ. Also, choose orientations on S_1, S_2 and Γ in such a way that the spanning condition holds for the associated currents, that is $\partial[\![N]\!] = \partial([\![S_1]\!] - [\![S_2]\!]) = [\![\Gamma]\!]$. We construct a sequence of surfaces M_j by slightly bending S_1 and S_2 in the radial direction, and then connecting the two pieces with a catenoidal neck, see Figure 3.2. Evidently, this can be arranged so that

$$\partial[\![M_j]\!] = [\![\Gamma]\!]\,, \qquad \lim_{j\to\infty} \delta_\infty(M_j) = 0\,,$$

and the M_j's converge to two copies of S_2 plus one copy of N, in the sense that

$$\mathbf{var}\,(M_j) \to \mathbf{var}\,(N) + 2\mathbf{var}\,(S_2) = \mathbf{var}\,(N,1) + \mathbf{var}\,(S_2,2)\,. \tag{3.19}$$

In particular:

$$\lim_{j\to\infty} \int_{M_j} \varphi\, d\mathcal{H}^n = \int_N \varphi\, d\mathcal{H}^n + 2\int_{S_2} \varphi\, d\mathcal{H}^n\,, \qquad \forall \varphi \in C^0_c(\mathbb{R}^{n+1})\,. \tag{3.20}$$

On the other hand, the currents $[\![M_j]\!]$ satisfy

$$[\![M_j]\!] \to [\![N]\!] \qquad \text{in the sense of currents}\,, \tag{3.21}$$

that is

$$\lim_{j\to\infty} \langle [\![M_j]\!], \omega\rangle = \langle [\![N]\!], \omega\rangle \qquad \forall\, \omega \in \mathscr{D}^n(\mathbb{R}^{n+1})\,, \tag{3.22}$$

because the two copies of S_2 appearing in the limit come with opposite orientations, and hence the corresponding currents cancel out. For this simple boundary curve Γ, we thus have a negative answer to (3.1): indeed, as shown by (3.20), the limit of the $\{M_j\}_j$ cannot be described only in terms of minimal surfaces spanned by Γ (which indeed is not spanning S_2). In this example the bubbling phenomenon occurs, as part of the limit surface has multiplicity 2. Observe also that Γ is not accessible. Indeed, (3.18) cannot hold at any $x \in \Gamma_2$. Finally, the example can be easily generalized to the situation when S_1 and S_2 are two smooth, bounded, simply connected orientable minimal surfaces S_1 and S_2, spanned by curves Γ_1 and Γ_2, with $S_2 \subset S_1$.

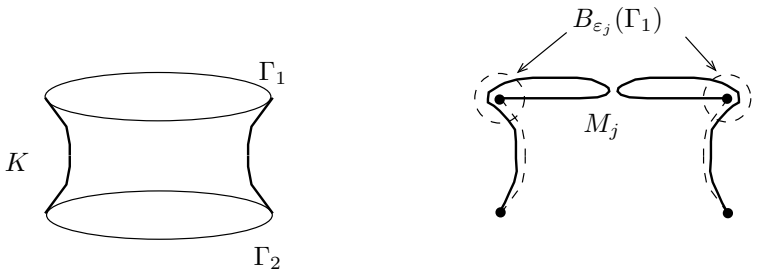

FIGURE 3.3. Bubbling is possible even when Γ is accessible from infinity if a weak notion of deficit is used. Here M_j is the surface of revolution obtained by rotating the one-dimensional profile on the right, $B_{\varepsilon_j}(\Gamma_1)$ denotes an ε_j-neighborhood of the circle Γ_1, and M_j^* is the part of M_j lying outside $B_{\varepsilon_j}(\Gamma_1)$. We take ε_j such that M_j intersects $\partial B_{\varepsilon_j}(\Gamma_1)$ in three circles, and so that the H_{M_j} is uniformly small on $M_j \setminus M_j^*$. The limit surface counts one copy of K, and two copies of the disk filling Γ_1.

Example 3.5 (Bubbling under accessibility from infinity with very weak deficit)**.** As in Example 3.1, let Γ consist of two parallel disks Γ_1 and Γ_2 with centers on a same axis, so that Γ is accessible from infinity. We can give a negative answer to question (3.1) if a too weak notion of almost-minimality deficit is used, arguing along the following lines. Consider a catenoid K spanned by Γ, and construct a sequence M_j by slightly deforming K outwards while keeping the boundary data at Γ_2, sharply turning around along Γ_1, going all the way towards the center of Γ_1, turning again downwards with a small catenoidal neck, and then almost filling Γ_1 with a disk; see Figure 3.3. Denoting by M_j^* the part of M_j lying at distance at most ε_j from Γ_1, by suitably selecting $\varepsilon_j \to 0$ as $j \to \infty$, we entail

$$\partial M_j = \Gamma\,, \qquad \lim_{j\to\infty} \|H_{M_j}\|_{C^0(M_j\setminus M_j^*)} = 0\,, \qquad \sup_{j\in\mathbb{N}} \|H_{M_j}\|_{L^1(M_j)} \le C\,.$$

We claim that

$$\lim_{j\to\infty} \delta_{-\infty}(M_j) = 0\,, \qquad \lim_{j\to\infty} \mathbf{var}\,(M_j) = 2\,\mathbf{var}\,(D_1) + \mathbf{var}\,(K_3)\,,$$

whereas

$$\lim_{j\to\infty} [\![M_j]\!] = [\![K_3]\!]\,.$$

Thus the limits in the sense of varifolds and currents do not agree (we observe bubbling), while an almost-minimality deficit goes to zero (although this is indeed the weakest possible deficit in our scale). To show that $\delta_{-\infty}(M_j) \to 0$, we fix a vector field X compactly supported away from Γ and with $|\nabla X| \le 1$. We fist notice that

$$\Big|\int_{M_j^*} \mathrm{div}^{\,M_j} X\Big| \le \mathcal{H}^2(M_j^*) \to 0\,.$$

If Γ_j^* is the component of the boundary of $M_j \setminus M_j^*$ that is not Γ_2, then by our choice of ε_j we find

$$\begin{aligned}\Big|\int_{M_j\setminus M_j^*} \mathrm{div}^{\,M_j} X\Big| &\le \int_{M_j\setminus M_j^*} |X|\,|\mathbf{H}_{M_j}| + \int_{\Gamma_j^*} |X|\,|\nu_{\Gamma_j^*}^{M_j}| \\ &\le \mathrm{diam}(M_j)\,\mathcal{H}^2(M_j)\,\|H_{M_j}\|_{C^0(M_j\setminus M_j^*)} + \varepsilon_j\,\mathcal{H}^1(\Gamma_j^*)\,,\end{aligned}$$

where we have used $|\nabla X| \le 1$ and $X = 0$ on Γ to deduce: (i) that $|X| \le \varepsilon_j$ on Γ_j^*; and, (ii) that $|X| \le \mathrm{diam}(M_j)$ on M_j. Since $\mathcal{H}^1(\Gamma_j^*) \to 3\,\mathcal{H}^1(\Gamma_1)$ by construction, we have proved our claim.

3.4. **Finiteness and regularity of the Plateau problem.** The second main assumption we shall consider is that Γ spans finitely many minimal surfaces. This is an idea that has to be formulated with great care, because of the singularities that minimal surfaces can exhibit.

Let Γ be an $(n-1)$-dimensional compact smooth surface without boundary. As discussed in § 3.2, any varifold $V = \mathbf{var}\,(N,\theta)$ corresponding to a compact $\mathcal{H}^n$-rectifiable set N in $\mathbb{R}^{n+1}$ and to a function $\theta \in L^1(\mathcal{H}^n \llcorner N;\mathbb{N})$ such that

$$\int_N \theta \operatorname{div}^N X \, d\mathcal{H}^n = 0 \qquad \forall X \in C^1_c(\mathbb{R}^{n+1}\setminus\Gamma;\mathbb{R}^{n+1}) \tag{3.23}$$

can arise as a possible limit of almost minimal surfaces. Possible limits V have two other important properties: (i) As a consequence of (3.23), the support of V is bounded: indeed, an application of the monotonicity identity implies that $\operatorname{spt} V$ is contained in the convex hull of Γ, see [Sim83, Theorem 19.2]; (ii) Given our assumptions on M_j, V has bounded first variation, in the sense that

$$\sup\Big\{\int_N \theta \operatorname{div}^N X \, d\mathcal{H}^n : X \in C^1_c(\mathbb{R}^{n+1};\mathbb{R}^{n+1})\,, |X| \le 1\Big\} < \infty\,.$$

In particular, by differentiation of Radon measures, (3.23) is always extended to

$$\int_N \theta \operatorname{div}^N X \, d\mathcal{H}^n = \int_{\mathbb{R}^{n+1}} X\cdot\nu \, d\mu_* \qquad \forall X \in C^1_c(\mathbb{R}^{n+1};\mathbb{R}^{n+1})\,, \tag{3.24}$$

where μ_* is singular with respect to $\mathcal{H}^n\llcorner N$, and where ν is a Borel unit vector field.

Fully understanding the regularity of $\operatorname{spt} V$ when (3.23) holds is a major open problem in Geometric Measure Theory. What is known on this specific problem is the following. Define (for any compact set N) the sets of regular and singular points of N as

$$\begin{aligned}
\operatorname{Reg}(N) \;&:=\; \Big\{x \in N \,:\, \exists \rho > 0 \text{ s.t. } N \cap B_\rho(x) \text{ is a smooth surface} \\
&\qquad\qquad\qquad\qquad \text{with or without boundary in } B_\rho(x)\Big\}\,,\\
\Sigma(N) \;&:=\; N \setminus \operatorname{Reg}(N)\,.
\end{aligned}$$

We further divide $\operatorname{Reg}(N)$ into $\operatorname{Reg}^\circ(N)$, the set of regular points of interior type (i.e., $N\cap B_\rho(x)$ is diffeomorphic to an n-dimensional disk), and into $\operatorname{Reg}^b(N)$, the regular points of boundary type. Now, let $V = \mathbf{var}\,(N,\theta)$ be such that (3.23) holds, and consider any open set A such that θ is constant on $A\cap N$. Then Allard's regularity theorem [All72] shows that

$$\mathcal{H}^n\Big((A\cap N)\Delta \operatorname{Reg}^\circ(N)\Big) = 0\,.$$

There is also a boundary regularity theorem [All75], showing the existence of $\varepsilon(n) > 0$ such that if $\theta = 1$ on $A\cap N$ and $\mathcal{H}^n(N\cap B_\rho(x)) \le (1+\varepsilon(n))\,\omega_n\rho^n/2$ for some $x \in A\cap N\cap\Gamma$, then $N\cap B_{\varepsilon(n)\rho}(x)$ is diffeomorphic to a half-disk.

The application of Allard's boundary regularity theorem can be quite deceptive. With reference to the notation of Example 3.1, it suffices to take $N = D_1 \cup K_3$ with $\theta \equiv 1$ to construct an example of V solving (3.23), with $N\setminus\Gamma = \operatorname{Reg}^\circ(N)$, and with $\Gamma_1 = \Sigma(N)$. Notice also that a similar example holds even in the "smoother" case when the measure μ_* considered in the extension (3.24) of (3.23) actually agrees with $\mathcal{H}^{n-1}\llcorner\Gamma$, and when ν is $\mathcal{H}^{n-1}$-a.e. orthogonal to Γ; that is to say, when (3.24) takes the more geometric form

$$\begin{cases}
\nu(x) \in \mathbb{S}^n \cap (T_x\Gamma)^\perp \qquad \text{for } \mathcal{H}^{n-1}\text{-a.e. } x \in \Gamma\,,\\
\displaystyle\int_N \theta \operatorname{div}^N X \, d\mathcal{H}^n = \int_\Gamma \nu\cdot X \, d\mathcal{H}^{n-1} \qquad \forall X \in C^1_c(\mathbb{R}^{n+1};\mathbb{R}^{n+1})\,.
\end{cases} \tag{3.25}$$

Indeed, if the distance between the circles Γ_1 and Γ_2 in Example 3.1 is such that K_3 meets with D_1 along Γ_1 at a 120-degrees angle, then adding up the unit conormals of D_1 and K_3 on Γ_1 we obtain a unit vector

$$\nu = \nu_{\Gamma_1}^{D_1} + \nu_{\Gamma_1}^{K_3}$$

such that (3.25) holds, but still the boundary regularity theorem cannot be applied at any point of Γ_1, as $N \setminus \Gamma = \mathrm{Reg}^\circ(N)$ and $\Gamma_1 = \Sigma(N)$.

Summarizing, the analysis of almost-minimal surfaces spanned by Γ unavoidably leads to consider minimal varifolds in $\mathbb{R}^{n+1} \setminus \Gamma$, but, in turn, these objects are only partially understood. Our compactness theorem will thus be conditional to assuming a rather precise structure for minimal varifolds in $\mathbb{R}^{n+1} \setminus \Gamma$. Namely, we shall require the possibility of decomposing them as linear combinations, with integer coefficients, of finitely many, unit density, connected pieces N_i with unit conormals ν_i^{co} along finite unions $\Gamma^{(i)}$ of connected components of Γ (in particular, each piece N_i may just be spanned by part of Γ); when removing its singular set and Γ, each piece N_i is disconnected into at most finitely many smooth connected components. As explained in Proposition 3.8 below, these assumptions hold in the fundamental case when Γ is a graph over a convex surface.

Definition 3.6 (Finiteness and regularity of minimal varifolds spanned by Γ)**.** Let Γ be a compact $(n-1)$-dimensional smooth surface without boundary in $\mathbb{R}^{n+1}$, and let $\{\Gamma_m\}_{m=1}^M$ denote the connected components of Γ. We say that Γ **spans finitely many minimal surfaces without boundary singularities** if there exists a **finite family** $\{N_i\}_i$ of compact $\mathcal{H}^n$-rectifiable sets with the following properties:

(i) for each i, $N_i \setminus \Gamma$ is connected, and there exists a finite union $\Gamma^{(i)} = \bigcup_{m \in I^{(i)}} \Gamma_m$ of connected components of Γ with

$$N_i \cap \Gamma = \Gamma^{(i)} = \mathrm{Reg}^b(N_i)\,, \qquad \Sigma(N_i) \cap \Gamma = \emptyset\,,$$

and such that for some $\nu_i^{\mathrm{co}} : \Gamma^{(i)} \to \mathbb{S}^n$ with $\nu_i^{\mathrm{co}}(x) \in (T_x\Gamma^{(i)})^\perp \cap T_x N_i$ it holds

$$\int_{N_i} \mathrm{div}^{\,N_i} X \, d\mathcal{H}^n = \int_{\Gamma^{(i)}} \nu_i^{\mathrm{co}} \cdot X \, d\mathcal{H}^{n-1} \qquad \forall X \in C_c^1(\mathbb{R}^{n+1}; \mathbb{R}^{n+1})\,;$$

moreover, $\mathrm{Reg}^\circ(N_i)$ has finitely many connected components $\{N_{i,\ell}\}_{\ell=1}^{L(i)}$ such that, for each ℓ, $\mathrm{cl}\,(N_{i,\ell}) \setminus \Sigma(N_i)$ is an orientable, smooth n-dimensional surface with boundary, whose boundary points are contained in $\Gamma^{(i)}$;

(ii) if $V = \mathbf{var}\,(N, \theta)$ has bounded support, bounded first variation, and satisfies

$$\int_N \theta \, \mathrm{div}^{\,N} X = 0 \qquad \forall X \in C_c^1(\mathbb{R}^{n+1} \setminus \Gamma; \mathbb{R}^{n+1})\,, \tag{3.26}$$

then there exist $q_i \in \mathbb{N}$ such that

$$V = \sum_i q_i \, \mathbf{var}\,(N_i)\,.$$

Remark 3.7. By Allard regularity theorem and by property (i), for each i, $\mathbf{var}\,(N_i)$ is a minimal varifold in $\mathbb{R}^{n+1} \setminus \Gamma$ with constant unit density, and thus we have

$$\mathcal{H}^n(\Sigma(N_i)) = 0\,.$$

Notice that we are excluding the possibility that $\Sigma(N_i)$ intersects Γ: in other words, singularities are allowed, but not up to the boundary. In principle, this is the situation depicted in Figure 3.1. It is not hard, however, to observe soap films with curves of singular points extending up to the wire frame, so we do not expect this assumption to be generic.

The problem of checking Definition 3.6 on some classes of examples, or even in simple explicit situations like the one described in Example 3.1, seems delicate. In the next proposition we address the case of graphs over convex boundaries.

Proposition 3.8. *If $\Omega \subset \mathbb{R}^n \times \{0\}$ is a bounded connected open set with smooth and convex boundary, and if $\Gamma \subset \mathbb{R}^{n+1}$ is the graph of a smooth function u over $\partial\Omega$, then Γ spans finitely many minimal surfaces in the sense of Definition 3.6.*

Proof. Let us assume without loss of generality that $0 \in \Omega$. Let $V = \mathbf{var}\,(N, \theta)$ be an integral varifold with bounded support satisfying (3.26). We first prove that $\mathrm{spt}V$ is contained in $\mathrm{cl}\,(\Omega \times \mathbb{R})$, where $\mathrm{cl}\,(A)$ denotes the closure of $A \subset \mathbb{R}^{n+1}$. Indeed let H_Ω denote the mean curvature of $\partial\Omega$ with respect to the outer unit normal to Ω. Consider the open cylinders $K(t) = t\,(\Omega \times \mathbb{R})$ for $t > 1$. Since the support of V is bounded, for t large enough we have that $\mathrm{spt}V \Subset K(t)$. If $t_* = \inf\{t : \mathrm{spt}V \Subset K(t)\}$, then $t_* < \infty$ and thus there exists $x = (x', x_{n+1}) \in \mathrm{spt}\,V \cap \partial K(t_*)$ such that, in the ordering of $\nu_{\partial K(t_*)}(x) = \nu_\Omega(x_*)$, $x_* := (x'/t_*, 0)$, the smooth surface $\partial K(t_*)$ touches from above $\mathrm{spt}V$ locally at x. Let us assume that $x \in \mathbb{R}^{n+1} \setminus \Gamma$. Since $\partial K(t_*)$ is smooth, $\mathbf{H}_{\partial K(t_*)}(x) \cdot \nu_{\partial K(t_*)}(x) = H_\Omega(x_*)/t_* \geq 0$, and V is minimal in a neighborhood of x, by the strong maximum principle of Schätzle [Sch04, Theorem 6.2] this is possible only if, locally at x, $\partial K(t_*)$ is contained in $\mathrm{spt}V$. Since $\mathrm{spt}V$ is anyway contained in $\mathrm{cl}\,(K(t_*))$, by a continuity argument, and by the connectedness of $\partial K(t_*)$, we obtain $\partial K(t_*) \subset \mathrm{spt}V$. This would be a contradiction, since $\mathrm{spt}V$ is bounded. Thus it must be that $x \in \Gamma$, i.e. $t_* = 1$, and $\mathrm{spt}V \subset \mathrm{cl}\,(\Omega \times \mathbb{R})$.

The classical area integrand theory (see, e.g. [Giu03, Chapter 1]) implies the existence of a smooth extension of u to the whole Ω, still denoted u, such that $G(u) = \{(z, u(z)) : z \in \mathrm{cl}\,(\Omega)\}$ satisfies

$$\int_{G(u)} \mathrm{div}^{\,G(u)} X \, d\mathcal{H}^n = \int_\Gamma X \cdot \nu_u \, d\mathcal{H}^{n-1} \qquad \forall X \in C^1_c(\mathbb{R}^{n+1}; \mathbb{R}^{n+1})$$

with $\nu_u(x) \in (T_x\Gamma)^\perp$ for every $x \in \Gamma$. Setting $N_1 = G(u)$, properties (i) and (ii) in Definition 3.6 are clearly satisfied by N_1.

We finally prove that $V = q\,\mathbf{var}\,(G(u))$ for some $q \in \mathbb{N}$. Since $\mathrm{spt}V$ is bounded and contained in the closure of $\Omega \times \mathbb{R}$, we find that

$$s^* = \inf\big\{s : x_{n+1} < s + u(z) \;\; \forall (z, x_{n+1}) \in \mathrm{spt}V\big\}$$

is finite. In particular, $s^*\, e_{n+1} + G(u)$ touches $\mathrm{spt}V$ from above in the ordering of e_{n+1}. If the touching point x does not belong to Γ, then, again by Schätzle's strong maximum principle we find that $s^*\, e_{n+1} + G(u) \subset \mathrm{spt}\,V$ with $s^* \neq 0$. But then $\mathrm{spt}V$ would have a contact point with $\partial\Omega \times \mathbb{R}$ outside of Γ, where V is minimal, and thus the strong maximum principle would imply $\partial\Omega \times \mathbb{R} \subset \mathrm{spt}V$, once again against the boundedness of $\mathrm{spt}\,V$. The touching point x of $s^*\, e_{n+1} + G(u)$ and $\mathrm{spt}V$ must thus lie on Γ, so that $s^* = 0$, and $x_{n+1} \leq u(z)$ whenever $(z, x_{n+1}) \in \mathrm{spt}\,V$. An entirely similar argument shows that

$$s_* = \sup\big\{s : x_{n+1} > s + u(z) \;\; \forall (z, x_{n+1}) \in \mathrm{spt}V\big\} = 0\,.$$

so that we also have $x_{n+1} \geq u(z)$ whenever $(z, x_{n+1}) \in \mathrm{spt}\,V$. We have thus proved that $G(u) = \mathrm{spt}\,V$. The constancy theorem for integral varifolds, [Sim83, Theorem 41.1], implies that $V = q\,\mathbf{var}\,(G(u))$ for a constant $q \in \mathbb{N}$. □

4. The compactness theorem

We are finally ready to state and prove our main compactness theorem.

Theorem 4.1 (Compactness theorem for almost-minimal surfaces)**.** *Let Γ be a smooth $(n-1)$-dimensional compact orientable manifold without boundary in $\mathbb{R}^{n+1}$, and let $[\![\Gamma]\!]$ be the $(n-1)$-current corresponding to the choice of an orientation τ_Γ on Γ. Assume that Γ is accessible from infinity (see Definition 3.2) and that Γ spans finitely many minimal surfaces without boundary singularities (see Definition 3.6).*

Let $\{M_j\}_j$ be a sequence of smooth n-dimensional surfaces, oriented by smooth unit normal vector fields ν_{M_j}, and with smooth boundaries Γ_j oriented in such a way that, if $[\![M_j]\!] = [\![M_j, \star\nu_{M_j}, 1]\!]$, then

$$\begin{cases} \partial[\![M_j]\!] = [\![\Gamma_j]\!]\,, \\ \sup_j \max\Big\{\mathcal{H}^n(M_j),\, \sup_{x\in M_j} |x|\Big\} < \infty\,, \\ \lim_{j\to\infty} \int_{M_j} |H_{M_j}| = 0\,. \end{cases} \tag{4.1}$$

Assume that Γ_j converges to Γ, in the sense that there exist Lipschitz maps $f_j\colon \Gamma \to \mathbb{R}^{n+1}$ with

$$\begin{cases} f_j(\Gamma) = \Gamma_j\,, \qquad \sup_j \mathrm{Lip}(f_j) < \infty\,, \\ \lim_{j\to\infty} \|f_j - \mathrm{id}_\Gamma\|_{C^1(\Gamma)} = 0\,. \end{cases} \tag{4.2}$$

Then, there exist an $\mathcal{H}^n$-rectifiable set N, and Borel vector fields $\nu_N : N \to \mathbb{S}^n$ and $\nu : \Gamma \to \mathbb{S}^n$ with

$$\nu_N(x) \in (T_xN)^\perp \text{ for } \mathcal{H}^n\text{-a.e. } x \in N\,, \tag{4.3}$$

$$\nu(x) \in (T_x\Gamma)^\perp \text{ for } \mathcal{H}^{n-1}\text{-a.e. } x \in \Gamma\,, \tag{4.4}$$

$$\partial[\![N, \star\nu_N, 1]\!] = [\![\Gamma]\!]\,, \tag{4.5}$$

$$\int_N \mathrm{div}^{\,N} X = \int_\Gamma X\cdot\nu\, d\mathcal{H}^{n-1} \qquad \forall X \in C^1_c(\mathbb{R}^{n+1};\mathbb{R}^{n+1})\,, \tag{4.6}$$

and such that, up to extracting subsequences, $M_j \to N$ both in the sense of currents and in the sense of varifolds, i.e.

$$[\![M_j]\!] \to [\![N, \star\nu_N, 1]\!]\,, \qquad \mathbf{var}\,(M_j) \to \mathbf{var}\,(N, 1)\,. \tag{4.7}$$

Remark 4.1. A point that we are not trying to formalize here is that in situations like the one considered in Figure 3.1, when $\Sigma(N)$, if present, is "classical", then one can actually prove that $\Sigma(N) = \emptyset$, thus concluding that smooth M_j's cannot converge to minimal surfaces with singularities. To illustrate the idea, let Γ_1 and Γ_2 be the circles of Example 3.1, and fix orientations on Γ_1 and Γ_2 in order to define the associated currents $[\![\Gamma_1]\!]$ and $[\![\Gamma_2]\!]$. Suppose by contradiction that as a limit of a sequence M_j of almost-minimal surfaces with $\partial[\![M_j]\!] = [\![\Gamma]\!] := [\![\Gamma_1]\!] + [\![\Gamma_2]\!]$ one obtains the singular minimal surface $N = K \cup K' \cup D$ obtained by gluing two catenoids K and K' to a disk D along the boundary circle $\Sigma = \partial D$ with a 120-degrees angle. Assign orientations to K, K', and D in such a way that

$$\partial[\![K]\!] = [\![\Gamma_1]\!] + \sigma_1\partial[\![D]\!]\,, \qquad \partial[\![K']\!] = [\![\Gamma_2]\!] + \sigma_2\partial[\![D]\!]\,, \qquad \sigma_i \in \{\pm 1\}\,.$$

The limit current T of the sequence $[\![M_j]\!]$ must then satisfy

$$T = \alpha_1\,[\![K]\!] + \alpha_2\,[\![K']\!] + \alpha_3\,[\![D]\!]$$

for $\alpha_i \in \{\pm 1\}$, so that

$$\partial T = \alpha_1\,[\![\Gamma_1]\!] + \alpha_2\,[\![\Gamma_2]\!] + (\alpha_1\sigma_1 + \alpha_2\sigma_2 + \alpha_3)\,[\![\partial D]\!]\,.$$

Since T is the limit of currents defined by the M_j's, we also have

$$\partial T = [\![\Gamma]\!] = [\![\Gamma_1]\!] + [\![\Gamma_2]\!]\,,$$

which implies $\alpha_1 = 1 = \alpha_2$ and

$$\sigma_1 + \sigma_2 + \alpha_3 = 0\,,$$

which is impossible, given $\sigma_1, \sigma_2, \alpha_3 \in \{-1, 1\}$. A general argument along these lines can be repeated if assuming that a number of odd half-spaces meet along points in $\Sigma(N)$.

Before giving the proof of the theorem, we need to introduce some notation. Given an n-dimensional varifold V on $\mathbb{R}^{n+1}$, that is, a Radon measure on $G^n = \mathbb{R}^{n+1} \times (\mathbb{S}^n/\equiv)$ as described in section 3, we denote by

$$\delta V(X) = \int_{G^n} \operatorname{div}_T X(x)\, dV(x,T)$$

the **first variation** of V along a vector field $X \in C^1_c(\mathbb{R}^{n+1};\mathbb{R}^{n+1})$. The **weight of** V and the **total first variation of** V are defined by

$$\begin{aligned} \|V\|(E) &:= V(E \times (\mathbb{S}^n/\equiv)) \\ \|\delta V\|(A) &:= \sup\Big\{ \int_{G^n} \operatorname{div}_T X(x)\, dV(x,T) : X \in C^1_c(A; B_1(0)) \Big\}, \end{aligned}$$

for every Borel set E and open set A in $\mathbb{R}^{n+1}$. Given an n-dimensional integer rectifiable current $T = [\![N, \star\nu_N, \alpha]\!]$, the **mass of** T is the Radon measure

$$\|T\| := |\alpha|\, \mathcal{H}^n \llcorner N\,.$$

We denote by

$$V_T = \mathbf{var}\,(N, |\alpha|)$$

the **induced varifold of** T.

Proof of Theorem 4.1. Step one: We start by discussing the varifold limit of the M_j's. By the area formula and by (4.2) we have

$$\mathcal{H}^{n-1}(\Gamma_j) \le C\mathcal{H}^{n-1}(\Gamma)\,. \tag{4.8}$$

Setting $V_j := \mathbf{var}\,(M_j)$, by the tangential divergence theorem we have

$$\delta V_j(X) = \int_{M_j} \operatorname{div}^{M_j} X\, d\mathcal{H}^n = \int_{M_j} X \cdot \mathbf{H}_{M_j}\, d\mathcal{H}^n + \int_{\Gamma_j} X \cdot \nu^{M_j}_{\Gamma_j}\, d\mathcal{H}^{n-1}\,, \tag{4.9}$$

for every $X \in C^1_c(\mathbb{R}^{n+1};\mathbb{R}^{n+1})$. In particular, (4.8) and $\delta_1(M_j) \to 0$ imply

$$\limsup_{j\to\infty} \|\delta V_j\|(\mathbb{R}^{n+1}) \le \limsup_{j\to\infty} \left(\int_{M_j} |\mathbf{H}_{M_j}|\, d\mathcal{H}^n + \mathcal{H}^{n-1}(\Gamma_j) \right) \le C\mathcal{H}^{n-1}(\Gamma)\,, \tag{4.10}$$

while at the same time $\|V_j\|(\mathbb{R}^{n+1}) = \mathcal{H}^n(M_j)$. By (4.1), the supports of the V_j's are contained in a fixed ball, and

$$\sup_j \|V_j\|(\mathbb{R}^{n+1}) \le C\,,$$

thus by Allard's compactness theorem for integral varifolds (cf. [All72, Theorem 6.4], [Sim83, Theorem 42.7]), there exists a not relabeled subsequence $V_j \to V$ as $j \to \infty$ for an integral varifold V. We notice that

$$\delta V(X) = 0 \qquad \forall X \in C^1_c(\mathbb{R}^{n+1} \setminus \Gamma, \mathbb{R}^{n+1})\,. \tag{4.11}$$

Indeed (4.2) implies that if $\operatorname{spt} X \subset \mathbb{R}^{n+1} \setminus \Gamma$, then $\operatorname{spt} X \subset \mathbb{R}^{n+1} \setminus \Gamma_j$ for every j large enough. Thus, $\delta_1(M_j) \to 0$ and (4.9) give

$$\delta V(X) = \lim_{j\to\infty} \delta V_j(X) = \lim_{j\to\infty} \int_{M_j} X \cdot \mathbf{H}_{M_j}\, d\mathcal{H}^n = 0$$

for every $X \in C^1_c(\mathbb{R}^{n+1} \setminus \Gamma, \mathbb{R}^{n+1})$, as claimed.

Since Γ spans finitely many minimal surfaces without boundary singularities, (4.11) implies the existence of finitely many compact $\mathcal{H}^n$-rectifiable sets $\{N_i\}_{i=1}^k$ such that

$$V = \sum_{i=1}^k q_i\, \mathbf{var}\,(N_i) \qquad \text{for some } q_i \in \mathbb{N}\,, \tag{4.12}$$

where, for each i, $N_i \setminus \Gamma$ is connected, there exist a finite union $\Gamma^{(i)} = \bigcup_{m\in I^{(i)}} \Gamma_m$ of connected components of Γ with

$$N_i \cap \Gamma = \Gamma^{(i)} = \mathrm{Reg}^b(N_i)\,, \qquad \Sigma(N_i) \cap \Gamma = \emptyset\,, \tag{4.13}$$

and a vector field $\nu_i^{\mathrm{co}} : \Gamma^{(i)} \to \mathbb{S}^n$ with $\nu_i^{\mathrm{co}}(x) \in (T_x\Gamma^{(i)})^\perp \cap T_x N_i$ for $\mathcal{H}^{n-1}$-a.e. $x \in \Gamma^{(i)}$ such that

$$\int_{N_i} \mathrm{div}^{\,N_i} X \, d\mathcal{H}^n = \int_{\Gamma^{(i)}} \nu_i^{\mathrm{co}} \cdot X \, d\mathcal{H}^{n-1} \qquad \forall X \in C^1_c(\mathbb{R}^{n+1};\mathbb{R}^{n+1})\,. \tag{4.14}$$

Moreover, for each i, $\mathrm{Reg}^\circ(N_i)$ has finitely many connected components $\{N_{i,\ell}\}_{\ell=1}^{L(i)}$ such that, for each ℓ, $\mathrm{cl}\,(N_{i,\ell}) \setminus \Sigma(N_i)$ is an orientable, smooth n-dimensional surface with boundary, whose boundary points are contained in $\Gamma^{(i)}$. As noticed in Remark 3.7, (4.14) and Allard's regularity theorem imply

$$\mathcal{H}^n(\Sigma(N_i)) = 0\,. \tag{4.15}$$

In particular, N_i is $\mathcal{H}^n$-equivalent to $\mathrm{Reg}^\circ(N_i)$, so that can rewrite (4.12) as

$$V = \sum_{i=1}^{k} \sum_{\ell=1}^{L(i)} q_{i,\ell}\, \mathbf{var}\,(N_{i,\ell})\,, \tag{4.16}$$

with $q_{i,\ell} = q_i$ for every $\ell = 1, \dots, L(i)$.

Step two: We now take the limit of the M_j's in the sense of currents. Setting $T_j := [\![M_j]\!]$, by (4.8), $\sup_j \mathcal{H}^n(M_j) < \infty$, and by the Federer-Fleming compactness theorem [FF60], see also [Sim83, Theorem 27.3]), we have that $T_j \to T$ in the sense of currents, up to extracting subsequences, where T is an integral current. The C^1-convergence of Γ_j to Γ, $T_j \to T$, and $\partial T_j = [\![\Gamma_j]\!]$, are easily seen to imply $\partial T = [\![\Gamma]\!]$. Moreover, it is easily seen that, as Radon measures on $\mathbb{R}^{n+1}$,

$$\|T\| \le \|V\|\,, \tag{4.17}$$

since the mass of currents is lower semicontinuous, the weight of varifolds is continuous on sequences with bounded supports, and since $\|T_j\| = \mathcal{H}^n \llcorner M_j = \|V_j\|$. By (4.12),

$$\mathrm{spt}(T) \;\subset\; \bigcup_{i=1}^{k} N_i \;\subset\; \left[\Gamma \cup \bigcup_{i=1}^{k} \Sigma(N_i) \cup \bigcup_{i=1}^{k} \bigcup_{\ell=1}^{L(i)} N_{i,\ell}\right]. \tag{4.18}$$

Next we introduce the integral n-current $T_{i,\ell} := T \llcorner N_{i,\ell}$. Notice that $N_{i,\ell}$ is a smooth, connected n-dimensional surface, and that

$$N_{i,\ell} \cap \mathrm{spt}\,\partial\, T_{i,\ell} = \emptyset$$

since

$$N_{i,\ell} \cap \mathrm{spt}\,\partial\, T_{i,\ell} \;\subset\; N_{i,\ell} \cap \mathrm{spt}\,\partial\, T = N_{i,\ell} \cap \Gamma \;\subset \mathrm{Reg}^\circ(N_i) \cap \Gamma = \emptyset\,,$$

thanks to (4.13). By the constancy theorem for integral currents (cf. [Sim83, Theorem 26.27]), we find $\alpha_{i,\ell} \in \mathbb{Z}$ and realizations $[\![N_{i,\ell}]\!]$ of $N_{i,\ell}$ as multiplicity one integral currents such that

$$T_{i,\ell} = \alpha_{i,\ell}\, [\![N_{i,\ell}]\!]\,.$$

Since $\mathcal{H}^n(\Sigma(N_i)) = 0$, (4.18) implies that

$$T = \sum_{i=1}^{k} \sum_{\ell=1}^{L(i)} \alpha_{i,\ell} [\![N_{i,\ell}]\!]\,. \tag{4.19}$$

Applying the boundary operator in the sense of currents to (4.19), and recalling that $\partial T = [\![\Gamma]\!]$, we find that

$$[\![\Gamma]\!] = \sum_{i=1}^{k} \sum_{\ell=1}^{L(i)} \alpha_{i,\ell}\, \partial [\![N_{i,\ell}]\!] \,. \tag{4.20}$$

Recall that $\mathrm{cl}\,(N_{i,\ell}) \setminus \Sigma(N_i)$ is a smooth surface with boundary, with boundary points contained in $\Gamma^{(i)}$. If Γ_m is one of the components of $\Gamma^{(i)}$, then there is exactly one ℓ such that $\Gamma_m \cap \mathrm{Reg}^b[\mathrm{cl}\,(N_{i,\ell}) \setminus \Sigma(N_i)] \neq \emptyset$, and, in correspondence to it,

$$\Gamma_m \subset \mathrm{cl}\,(N_{i,\ell}) \,.$$

In particular, localizing (4.20) to Γ_m, and setting $[\![\Gamma_m]\!] = [\![\Gamma]\!] \llcorner \Gamma_m$, we have

$$[\![\Gamma_m]\!] = \sum_{i,\ell\,:\,\Gamma_m \subset \mathrm{cl}\,(N_{i,\ell})} \alpha_{i,\ell}\, \partial [\![N_{i,\ell}]\!] \llcorner \Gamma_m \,, \tag{4.21}$$

and since Γ_m itself is connected,

$$\text{if } \Gamma_m \subset \mathrm{cl}\,(N_{i,\ell}), \text{ then } \begin{cases} \text{either} & \partial [\![N_{i,\ell}]\!] \llcorner \Gamma_m = [\![\Gamma_m]\!] \,, \\ \quad\text{or} & \partial [\![N_{i,\ell}]\!] \llcorner \Gamma_m = -[\![\Gamma_m]\!] \,. \end{cases}$$

In particular, for suitable $\sigma^m_{i,\ell} \in \{\pm 1\}$, we deduce from (4.21) that

$$\sum_{i,\ell\,:\,\Gamma_m \subset \mathrm{cl}(N_{i,\ell})} \sigma^m_{i,\ell}\, \alpha_{i,\ell} = 1 \qquad \text{for every } m = 1, \dots, M \,. \tag{4.22}$$

Step three: We now link T to V. Let V_T denote the integral varifold associated with T, that is

$$V_T = \sum_{i=1}^{k} \sum_{\ell=1}^{L(i)} |\alpha_{i,\ell}|\, \mathbf{var}\,(N_{i,\ell}) \,. \tag{4.23}$$

Noticing that

$$V_{T_j} = \mathbf{var}\,(M_j) = V_j \,,$$

and taking into account that Γ_j is converging to Γ in C^1, $V_j \to V$ as varifolds, and $T_j \to T$ as currents, we are allowed to apply White's theorem [Whi09, Theorem 1.2] to deduce the existence of an integral varifold W such that

$$V = V_T + 2W \,. \tag{4.24}$$

Therefore, it has to be

$$2W = \sum_{i=1}^{k} \sum_{\ell=1}^{L(i)} (q_{i,\ell} - |\alpha_{i,\ell}|)\, \mathbf{var}\,(N_{i,\ell}) \,,$$

and the integrality condition of W in turn yields that there exist $\beta_{i,\ell} \in \mathbb{N}$ such that

$$q_{i,\ell} - |\alpha_{i,\ell}| = 2\beta_{i,\ell} \quad \text{for every } i \in \{1, \dots, k\},\ \ell \in \{1, \dots, L(i)\} \,. \tag{4.25}$$

We now claim that, for every $m = 1, ..., M$,

$$\sum_{i,\ell\,:\,\Gamma_m \subset \mathrm{cl}(N_{i,\ell})} q_{i,\ell} \ \text{ is an odd integer} \,. \tag{4.26}$$

Indeed, using $a \equiv b \bmod(2)$ as a shorthand for saying that a and b have the same parity, (4.25) implies that

$$\sum_{i,\ell\,:\,\Gamma_m \subset \mathrm{cl}(N_{i,\ell})} q_{i,\ell} \equiv \sum_{i,\ell\,:\,\Gamma_m \subset \mathrm{cl}(N_{i,\ell})} |\alpha_{i,\ell}| \mod(2) \,.$$

At the same time

$$\sum_{i,\ell\,:\,\Gamma_m\subset \mathrm{cl}(N_{i,\ell})} (|\alpha_{i,\ell}| - \sigma^m_{i,\ell}\,\alpha_{i,\ell}) \;=\; 2\sum_{(\alpha_{i,\ell}>0)\wedge(\sigma^m_{i,\ell}=-1)} \alpha_{i,\ell} \;-\; 2\sum_{(\alpha_{i,\ell}<0)\wedge(\sigma^m_{i,\ell}=1)} \alpha_{i,\ell}$$
$$\equiv 0 \mod(2)\,,$$

so that, taking (4.22) into account, (4.26) holds.

Step four: We now exploit the assumption that Γ is accessible from infinity, to improve (4.26) and show that, for every $m = 1, ..., M$,

$$\sum_{i,\ell\,:\,\Gamma_m\subset \mathrm{cl}(N_{i,\ell})} q_{i,\ell} = 1\,; \tag{4.27}$$

or, equivalently, that

$$\sum_{i\,:\,m\in I^{(i)}} q_i = 1\,, \qquad \text{for every } m = 1, ..., M\,. \tag{4.28}$$

Indeed, by (4.12) and by (4.14), for every $X \in C^1_c(\mathbb{R}^{n+1}, \mathbb{R}^{n+1})$ we find

$$\delta V(X) = \sum_{i=1}^k q_i \int_{N_i} \mathrm{div}^{\,N_i} X\, d\mathcal{H}^n = \sum_{i=1}^k q_i \int_{\Gamma^{(i)}} X\cdot \nu^{\mathrm{co}}_i\, d\mathcal{H}^{n-1}\,, \tag{4.29}$$

while, at the same time, $\int_{M_j} |H_{M_j}| \to 0$ and (4.9) imply

$$\delta V(X) = \lim_{j\to\infty} \delta V_j(X) = \lim_{j\to\infty} \int_{\Gamma_j} X\cdot \nu^{M_j}_{\Gamma_j}\, d\mathcal{H}^{n-1}\,. \tag{4.30}$$

By (4.2), $\Gamma_j = f_j(\Gamma)$ with $\|f_j - \mathrm{Id}\,\|_{C^1(\Gamma)} \to 0$ as $j \to \infty$, so that, by the area formula,

$$\int_{\Gamma_j} X\cdot \nu^{M_j}_{\Gamma_j}\, d\mathcal{H}^{n-1} = \int_{\Gamma} (X\circ f_j)\cdot (\nu^{M_j}_{\Gamma_j}\circ f_j)\, \mathbf{J}^{\Gamma} f_j\, d\mathcal{H}^{n-1}\,, \tag{4.31}$$

where the tangential Jacobian of f_j along Γ satisfies $\mathbf{J}^{\Gamma} f_j \to 1$ in $C^0(\Gamma)$, while of course $(X\circ f_j) \to X$ in $C^0(\Gamma)$. Considering that

$$\|\nu^{M_j}_{\Gamma_j}\circ f_j\|_{L^\infty(\Gamma)} \le 1$$

for every j, by weak-* compactness, and up to extracting a subsequence, there exists a vector field $\sigma \in L^\infty(\Gamma, \mathbb{R}^{n+1})$ with $\|\sigma\|_{L^\infty(\Gamma)} \le 1$ and a (not relabeled) subsequence such that

$$\nu^{M_j}_{\Gamma_j}\circ f_j \overset{*}{\rightharpoonup} \sigma \text{ in } L^\infty(\Gamma, \mathbb{R}^{n+1}).$$

Combining (4.29), (4.30), (4.31) and this last information with $(X\circ f_j)\,\mathbf{J}^{\Gamma} f_j \to X$ in $C^0(\Gamma)$, we find

$$\sum_{i=1}^k q_i \int_{\Gamma^{(i)}} X\cdot \nu^{\mathrm{co}}_i = \int_{\Gamma} X\cdot \sigma\,, \qquad \forall X \in C^1_c(\mathbb{R}^{n+1}; \mathbb{R}^{n+1})\,. \tag{4.32}$$

If we set

$$\hat\Gamma_m := \bigcup_{m'\neq m} \Gamma_{m'}\,, \qquad m = 1, ..., M\,,$$

then (4.32) tested at $X \in C^1_c(\mathbb{R}^{n+1}\setminus \hat\Gamma_m; \mathbb{R}^{n+1})$ implies that for every such X,

$$\sum_{i\,:\,m\in I^{(i)}} q_i \int_{\Gamma_m} X\cdot \nu^{\mathrm{co}}_i = \int_{\Gamma_m} X\cdot \sigma\,, \qquad \text{for every } m = 1, ..., M\,. \tag{4.33}$$

By arbitrariness of X,

$$\sigma(x) = \sum_{i\,:\,m\in I^{(i)}} q_i\,\nu_i^{\rm co}(x) \qquad \text{at } \mathcal{H}^{n-1}\text{-a.e. } x\in\Gamma_m, \text{ and for every } m=1,...,M\,.$$

This implies $\sigma(x)\in(T_x\Gamma)^\perp$ for $\mathcal{H}^{n-1}$-a.e. $x\in\Gamma$, as well that

$$\Big|\sum_{i\,:\,m\in I^{(i)}} q_i\,\nu_i^{\rm co}(x)\Big| \le 1 \quad \text{for } \mathcal{H}^{n-1}\text{-a.e. } x\in\Gamma_m \tag{4.34}$$

for every $m=1,...,M$.

We are now ready to prove (4.28). Thanks to (4.26), for every $m\in\{1,\dots,M\}$ we can find $p\in\mathbb{N}\cup\{0\}$ such that

$$\sum_{i\,:\,m\in I^{(i)}} q_i = 2p+1\,, \tag{4.35}$$

and we want to show that it must always be $p=0$. Since Γ is accessible from infinity, we can select $x_0\in\Gamma_m$ such that (4.34) holds at $x=x_0$, and such that there exists a wedge W (strictly contained in a half-space) with vertex at x_0 and containing $\Gamma^{\rm co}$. Up to rigid motions, we assume that $x_0=0$ and that

$$W=\Big\{(x_1,x')\in\mathbb{R}^{n+1}\,:\,x_1\ge 0 \text{ and } |x'|\le x_1\tan(\phi)\Big\}\,,\quad \text{for some } \phi\in[0,\pi/2)\,.$$

The n-plane $\pi := e_1^\perp = \{x_1=0\}$ is then a supporting hyperplane to $\Gamma^{\rm co}$ at $x_0=0$. Furthermore, since $x_0=0$ is a point on $\Gamma_m\subset\Gamma$, the tangent space $T_0\Gamma$ is a linear subspace of π. We may assume that $T_0\Gamma=\{x_1=0=x_{n+1}\}$. Finally, by the classical convex hull property of minimal surfaces, we have $N_i\subset\Gamma^{\rm co}\subset W$ for every i.

Now, for every i such that $m\in I^{(i)}$, $\nu^{(i)} := -\nu_i^{\rm co}(0)$ is a unit vector in the two-dimensional plane $(T_0\Gamma)^\perp=\{x_j=0 \text{ for } j=2,\dots,n\}$. In the coordinates (x_1,x_{n+1}), thanks to $N_i\subset W$, we find that $\nu^{(i)}$ points *inwards* W, and thus that

$$\nu^{(i)} = \big(\cos\theta_i,\sin\theta_i\big) \qquad \text{for some } |\theta_i|\le\phi\,.$$

If $\{i_1,\dots,i_{r(m)}\}\subset\{1,\dots,k\}$ is the set of indexes i such that $m\in I^{(i)}$, we define the vectors $v_1,\dots,v_{2p+1}$ by setting

$$\begin{aligned}
&v_1=v_2=\dots=v_{q_{i_1}} := \nu^{(i_1)}\,,\\
&v_{q_{i_1}+1}=v_{q_{i_1}+2}=\dots=v_{q_{i_1}+q_{i_2}} := \nu^{(i_2)}\,,\\
&\dots\\
&v_{2p+2-q_{i_r}}=\dots=v_{2p+1} := \nu^{(i_r)}\,,
\end{aligned}$$

so that, by (4.34) applied at $x=x_0=0$,

$$-\sum_{i\,:\,m\in I^{(i)}} q_i\,\nu_i^{\rm co}(0) = \sum_{i\,:\,m\in I^{(i)}} q_i\,\nu^{(i)} = \sum_{h=1}^{2p+1} v_h$$

has length ≤ 1. We conclude the proof by showing that, if $p\ge 1$, then

$$\Big|\sum_{h=1}^{2p+1} v_h\Big| > 1\,. \tag{4.36}$$

A proof of (4.36) is in [DR16, Lemma 6.16]. For the reader's convenience and for the sake of clarity, we *verbatim* repeat the argument used in [DR16]. First, we order the vectors v_h in such a way that $\theta_1\le\theta_2\le\dots\le\theta_{2p+1}$. For every $j\le p$, set $w_j := v_j+v_{2p+2-j}$. Using

simple geometric considerations, one immediately sees that w_j is a positive multiple of the vector

$$\left(\cos\left(\frac{\theta_j+\theta_{2p+2-j}}{2}\right),\sin\left(\frac{\theta_j+\theta_{2p+2-j}}{2}\right)\right).$$

Since $\theta_j \le \theta_{p+1} \le \theta_{2p+2-j}$, the angle between the vectors w_j and v_{p+1} is

$$\sphericalangle(w_j, v_{p+1}) = \left|\theta_{p+1} - \frac{\theta_j+\theta_{2p+2-j}}{2}\right| \le \frac{\theta_{2p+2-j}-\theta_j}{2} \le \phi < \frac{\pi}{2}\,,$$

so that $w_j \cdot v_{p+1} > 0$. Then, we can use the Cauchy-Schwarz inequality to estimate

$$\left|\sum_{h=1}^{2p+1} v_h\right| \ge \left(\sum_{h=1}^{2p+1} v_h\right)\cdot v_{p+1} = \sum_{j=1}^{p} w_j\cdot v_{p+1} + |v_{p+1}| > 1\,.$$

This proves (4.36).

Step five: We conclude the proof. By (4.28), for every $m = 1, ..., M$, adding up over those i such that $m \in I^{(i)}$, we find $\sum q_i = 1$. By exploiting this fact, we find that:

- $q_i \in \{0,1\}$ for every $i \in \{1,\dots,k\}$; in other words, it cannot be $q_i \ge 2$;
- if $q_i = 1$, then $q_{i'} = 0$ for any $i' \ne i$ such that $I^{(i)} \cap I^{(i')} \ne \emptyset$: hence, for every $m = 1,\dots,M$ there is one and only one $i = i_m$ with $m \in I^{(i_m)}$ and $q_{i_m} = 1$;
- from (4.25): since $q_i \in \{0,1\}$ for every i, $\beta_{i,\ell} = 0$ for every $i \in \{1,\dots,k\}$ and $\ell \in \{1,\dots,L(i)\}$. Thus, if $q_i = 1$ then $\alpha_{i,\ell} = \pm 1$ for every ℓ; if $q_i = 0$ then $\alpha_{i,\ell} = 0$ for every ℓ.

We can thus argue as follows. We set $m_1 := 1$, and let i_1 be the only index in $\{1,\dots,k\}$ such that $1 \in I^{(i_1)}$ and $q_{i_1} = 1$. Next, let $m_2 := \min\{m \in 1,\dots,M :\ m \notin I^{(i_1)}\}$, and let i_2 be the corresponding index. Proceeding inductively, after a finite number h of steps the set $\{m :\ m \notin I^{(i_1)} \cup \dots \cup I^{(i_h)}\}$ will be empty. We finally set

$$N := \bigcup_{r=1}^{h} N_{i_r}\,,$$

and claim that N satisfies the conclusions of the theorem. In order to verify (4.6), we define $\nu : \Gamma \to \mathbb{S}^n$ by

$$\nu(x) = \nu^{\rm co}_{i_m}(x) \in (T_x\Gamma)^\perp \qquad \text{if } x \in \Gamma_m\,,$$

and use (4.14). Noticing that $q_i = 0$ if $i \ne i_r$ for every $r = 1, ..., h$, and $q_i = 1$ otherwise, we see that

$$V = \sum_{i=1}^{k} q_i\,\mathbf{var}\,(N_i) = \sum_{r=1}^{h} \mathbf{var}\,(N_{i_r}) = \mathbf{var}\,(N)\,,$$

so that $\mathbf{var}\,(M_j) \to \mathbf{var}\,(N)$, which is the second conclusion in (4.7); and as for the first conclusion in (4.7), $\|T\| \le \|V\|$ implies

$$T = \sum_{r=1}^{h}\sum_{\ell=1}^{L(i_r)} \alpha_{i_r,\ell}[\![N_{i_r,\ell}]\!]\,, \tag{4.37}$$

with $\alpha_{i_r,\ell} = \pm 1$. Taking into account that $\mathcal{H}^n(\Gamma \cup \bigcup_{r=1}^h \Sigma(N_{i_r})) = 0$, we can now define a Borel orientation $\nu_N \colon N \to \mathbb{S}^n$ by setting $\nu_N|_{N_{i_r,\ell}} := \alpha_{i_r,\ell}\,\nu_{N_{i_r,\ell}}$, where $\nu_{N_{i_r,\ell}}$ is the orientation defining the current $[\![N_{i_r,\ell}]\!]$. With this definition, equation (4.37) reads

$$T = [\![N, \star\nu_N, 1]\!]\,, \tag{4.38}$$

which implies that $[\![M_j]\!] \to [\![N, \star\nu_N, 1]\!]$ in the sense of currents. This completes the proof of (4.5), thus of the theorem. □

5. Sharp decay estimates

In this last section we refine the conclusions of Theorem 4.1 with sharp quantitative estimates under the additional assumptions that: (i) the boundaries of the surfaces M_j are fixed, i.e., we assume $\Gamma_j = \Gamma$; (ii) for some fixed $p > n$,

$$\sup_{j\in\mathbb{N}} \int_{M_j} |H_{M_j}|^p < \infty\,; \tag{5.1}$$

and (iii) the limit minimal surface N is classical, that is, $\Sigma(N) = \emptyset$. Under these assumptions, by combining Allard's regularity theorem [All72] and the implicit function theorem one can show the existence of smooth functions $u_j : N \to \mathbb{R}$ with $u_j = 0$ on ∂N, and such that

$$M_j = \Big\{x + u_j(x)\,\nu_N(x) : x \in N\Big\}\,, \qquad \lim_{j\to\infty} \|u_j\|_{C^1(N)} = 0\,.$$

Assumption (i) is not really needed to parameterize M_j over N. Indeed, one could obtain a global parametrization (possibly with non-trivial tangential components) as soon as Γ_j converges to Γ in, say, $C^{1,\alpha}$, see [CLM16, LM17]. Assumptions (ii) and (iii) are instead needed to have the quantitative regularity estimates of Allard, and the possibility to apply them to the M_j's for proving the graphicality property. We omit the details of the argument leading to the existence of the functions u_j, since it has appeared many other times in the literature: for instance, see [FM11, CLM16, LM17, KM17, CM17].

We now collect some formulas concerning the geometry of almost-flat normal Lipschitz graphs over a smooth compact embedded orientable n-dimensional surface $N \subset \mathbb{R}^{n+1}$, and prove a basic C^0-estimate; see in particular (5.13) below, whose proof should be compared with the argument of [KM17, Section 4]. Let us consider a Lipschitz function $u : N \to \mathbb{R}$ with $u = 0$ on ∂N and $\|u\|_{C^0(N)} + \mathrm{Lip}(u) \le \varepsilon$ small enough depending on N. We set

$$\psi_u(p) := p + u(p)\nu_N(p)\,, \qquad p \in N\,,$$

and let $\Psi_u := \psi_u(N)$. We also assume that Ψ_u has a distributional mean curvature $H_{\Psi_u} \in L^1(\Psi_u)$, so that

$$\int_{\Psi_u} \mathrm{div}^{\,\Psi_u} X\, d\mathcal{H}^n = \int_{\Psi_u} X \cdot \nu_{\Psi_u}\, H_{\Psi_u}\, d\mathcal{H}^n \qquad \forall X \in C^1_c(\mathbb{R}^{n+1};\mathbb{R}^{n+1})$$

where ν_{Ψ_u} is the normal to Ψ_u induced by ν_N through ψ_u. By the area formula, it holds for every bounded Borel measurable function g on Ψ_u that

$$\int_{\Psi_u} g\, d\mathcal{H}^n = \int_N (g \circ \psi_u)\, \mathbf{J}^N \psi_u\,. \tag{5.2}$$

For every $\varphi \in C^1_c(N)$ and t in a neighborhood of 0, we consider the variation

$$\begin{aligned} \Psi_{u+t\varphi} &= \Big\{p + u(p)\nu_N(p) + t\,\varphi(p)\,\nu_N(p) : p \in N\Big\} \\ &= \Big\{q + t\,(\varphi\,\nu_N)(\pi_N(q)) : q \in \Psi_u\Big\}\,, \end{aligned}$$

where we denote by

$$\pi_N : B_{\varepsilon_0}(N) \to N$$

the smooth nearest point projection of the ε_0-neighborhood of N onto N, and where of course we are assuming $\varepsilon < \varepsilon_0$. By the standard first variation formula for the area applied

to Ψ_u we find that

$$\begin{aligned}\frac{d}{dt}\Big|_{t=0}\mathcal{H}^n(\Psi_{u+t\varphi}) &= \frac{d}{dt}\Big|_{t=0}\mathcal{H}^n\Big(\Big[\mathrm{Id}\,+t\,[(\varphi\nu_N)\circ\pi_N]\Big](\Psi_u)\Big)\\ &= \int_{\Psi_u} H_{\Psi_u}\nu_{\Psi_u}\cdot[(\varphi\,\nu_N)\circ\pi_N]\,. \end{aligned}\tag{5.3}$$

Since π_N restricted to Ψ_u is the inverse of ψ_u, we have

$$\begin{aligned}\int_N \frac{d}{dt}\Big|_{t=0}\mathbf{J}^N\psi_{u+t\varphi} &= \frac{d}{dt}\Big|_{t=0}\mathcal{H}^n(\Psi_{u+t\varphi}) \\ &= \int_N \varphi\left(H_{\Psi_u}\circ\psi_u\right)(\nu_{\Psi_u}\circ\psi_u)\cdot\nu_N\,\mathbf{J}^N\psi_u\,.\end{aligned}\tag{5.4}$$

We now want to compute H_{Ψ_u} by using local coordinates. Let us cover N by open sets $A\subset\mathbb{R}^{n+1}$ such that at every $p\in A\cap N$ we can define an orthonormal frame $\{\tau_i(p)\}_{i=1}^n$ for T_pN with $\nabla_{\tau_i}\nu_N=\kappa_i\,\tau_i$, where $\kappa_1\le\kappa_2\le\cdots\le\kappa_n$ denote the principal curvatures of N. Setting $\partial_i u=\nabla_{\tau_i}u$ and $Du=(\partial_1 u,...,\partial_n u)\in\mathbb{R}^n$, we find

$$\mathbf{J}^N\psi_u = G(p,u,Du)\quad\text{for } p\in A\cap N\,,\tag{5.5}$$

where $G=G(p,z,\xi):(A\cap N)\times\mathbb{R}\times\mathbb{R}^n\to\mathbb{R}$ is given by

$$G(p,z,\xi)=\prod_{i=1}^n(1+\kappa_i\,z)\sqrt{1+\sum_{i=1}^n\Big(\frac{\xi_i}{1+\kappa_i z}\Big)^2}\,.\tag{5.6}$$

Noticing that, on $A\cap N$,

$$\nu_{\Psi_u}\circ\psi_u=\frac{\nu_N-\sum_{i=1}^n\partial_i^*u\,\tau_i}{\sqrt{1+|D^*u|^2}}\,,\qquad \partial_i^*u=\frac{\partial_i u}{1+u\,\kappa_i\,,}\,,\qquad D^*u=(\partial_1^*u\,\ldots,\partial_n^*u)\in\mathbb{R}^n\,,$$

we find that

$$(\nu_{\Psi_u}\circ\psi_u)\cdot\nu_N=\frac{1}{\sqrt{1+|D^*u|^2}}\qquad\text{on } A\cap N\,.$$

By (5.5) we also have, again on $A\cap N$,

$$\frac{d}{dt}\Big|_{t=0}\mathbf{J}^N\psi_{u+t\varphi}=\frac{\partial G}{\partial z}(p,u,Du)\varphi+\sum_{i=1}^n\frac{\partial G}{\partial\xi^i}(p,u,Du)\partial_i\varphi\,.\tag{5.7}$$

Thus, if we test (5.4) with $\varphi\in C_c^1(A\cap N)$, and then we integrate by parts, we obtain

$$(H_{\Psi_u}\circ\psi_u)\,\frac{\mathbf{J}^N\psi_u}{\sqrt{1+|D^*u|^2}}=\frac{\partial G}{\partial z}(p,u,Du)-\sum_{i=1}^n\partial_i\Big(\frac{\partial G}{\partial\xi^i}(p,u,Du)\Big)\,.\tag{5.8}$$

To understand the structure of (5.8), we compute for the ξ-gradient of G,

$$\frac{\partial G}{\partial\xi_i}(p,z,\xi)=g(p,z,\xi)\frac{\xi_i}{(1+\kappa_i z)^2}\qquad g(p,z,\xi)=\frac{\prod_{i=1}^n(1+\kappa_i\,z)}{\sqrt{1+\sum_{i=1}^n\left(\frac{\xi_i}{1+\kappa_i z}\right)^2}}\,;\tag{5.9}$$

and for the z-derivative of G,

$$\frac{\partial G}{\partial z}(p,z,\xi)=G(p,z,\xi)\sum_{j=1}^n\frac{\kappa_j}{1+z\,\kappa_j}\left\{1-\frac{\xi_j^2}{(1+z\,\kappa_j)^2\Big(1+\sum_{i=1}^n\left(\frac{\xi_i}{1+\kappa_i z}\right)^2\Big)}\right\}.\tag{5.10}$$

By exploiting $\|u\|_{C^0(N)}+\mathrm{Lip}(u)<\varepsilon$, we thus find that for measurable functions a_i and b on $N\cap A$ with

$$\|a_i-1\|_{L^\infty(N\cap A)}+\|b-1\|_{L^\infty(N\cap A)}\le C(N)\varepsilon$$

we have

$$\sum_{i=1}^n \partial_i\Big(\frac{\partial G}{\partial \xi^i}(p,u,Du)\Big) = \sum_{i=1}^n \partial_i(a_i\,\partial_i u)\,, \qquad \frac{\partial G}{\partial z}(p,u,Du) = b\sum_{i=1}^n \frac{\kappa_i}{1+\kappa_i\,u}\,.$$

Using $0 = H_N = \sum_{i=1}^n \kappa_i$ we get

$$\frac{\partial G}{\partial z}(p,u,Du) = b\sum_{i=1}^n \Big(\frac{\kappa_i}{1+\kappa_i\,u} - \kappa_i\Big) = -b\,u\,\sum_{i=1}^n \frac{\kappa_i^2}{1+\kappa_i\,u} = -c\,u$$

where c is a non-negative, bounded measurable function defined on $A\cap N$. Overall (5.8) can be rewritten as

$$(H_{\Psi_u}\circ\psi_u)\,d = -c\,u - \sum_{i=1}^n \partial_i(a_i\,\partial_i u) \qquad \text{on } A\cap N \tag{5.11}$$

where we have set for brevity $d = \mathbf{J}^N\psi_u/\sqrt{1+|D^*u|^2}$, so that $\|d-1\|_{L^\infty(A\cap N)} \le C(N)\,\varepsilon$.

We finally formulate (5.11) as an elliptic PDE on a domain of $\mathbb{R}^n$. To this end, up to decrease the size of A, we can introduce coordinates on $A\cap N$ by means of an embedding $F : U\subset\mathbb{R}^n \to \mathbb{R}^{n+1}$ of an open set U with smooth boundary in the unit ball of $\mathbb{R}^n$ with $A\cap N = F(U)$ and $A\cap \mathrm{bd}\,(N) = F(\mathrm{bd}\,(U))$. We set $\sigma_i = (\partial F/\partial x^i)\circ F^{-1}$ so that $\{\sigma_i(p)\}_{i=1}^n$ is also a frame of T_pN for each $p\in A\cap N$, and we have

$$\tau_i = \sum_{k=1}^n t_i^k\,\sigma_k$$

for suitable functions $t_k^i \in C^\infty(A\cap N)$. Setting $\bar f = f\circ F$ for functions f defined on $F(U) = A\cap N$, we notice that if $\varphi\in C_c^1(A\cap N)$, then

$$\begin{aligned}
-\int_N \varphi\sum_{i=1}^n \partial_i(a_i\,\partial_i u) &= \int_{A\cap N}\sum_{i=1}^n a_i\nabla_{\tau_i}u\,\nabla_{\tau_i}\varphi\\
&= \int_{A\cap N}\sum_{i,k,h=1}^n a_i\,t_i^k\,t_i^h\,\nabla_{\sigma_k}u\,\nabla_{\sigma_h}\varphi\\
&= \int_U JF\sum_{i,k,h=1}^n \bar a_i\,\bar t_i^k\,\bar t_i^h\,\frac{\partial\bar u}{\partial x^k}\,\frac{\partial\bar\varphi}{\partial x^h}\\
&= \int_U \Lambda\,\nabla\bar u\cdot\nabla\bar\varphi
\end{aligned}$$

for the symmetric, bounded and uniformly elliptic tensor field

$$\Lambda(x) = JF(x)\sum_{i=1}^n \bar a_i(x)\,v_i(x)\otimes v_i(x) \qquad v_i(x) = \sum_{k=1}^n \bar t_i^k(x)\,e_k\,.$$

Notice that the ellipticity of Λ relies on the facts that $\{v_i(x)\}_{i=1}^n$ is a basis of $T_x\mathbb{R}^n$, F is an embedding, and $\{\tau_i(p)\}_{i=1}^n$ is a basis of T_pN. Thus we can understand (5.11) as

$$(H_{\Psi_u}\circ\psi_u\circ F)\,\bar d = -\bar c\,\bar u - \mathrm{div}\,(\Lambda\nabla\bar u) \qquad \text{on } U\,, \tag{5.12}$$

where $\bar c$ is non-negative and bounded, and $\|\bar a_i - 1\|_{L^\infty(U)} + \|\bar d - 1\|_{L^\infty(U)} \le C(N)\,\varepsilon$. By [GT98, Theorem 8.17, Theorem 8.25], we find that, for any ball B_{4r} contained in the unit ball where U is a smooth domain with boundary,

$$\|\bar u\|_{C^0(B_r\cap U)} \le C(N,r,q)\Big\{\|\bar u\|_{L^2(B_{2r}\cap U)} + \|(H_{\Psi_u}\circ\psi_u\circ F)\|_{L^q(B_{2r}\cap U)}\Big\}\,,$$

provided $q > n/2$ and assuming that the right-hand side is finite. Changing variables one more time, and exploiting a covering argument, we thus find

$$\|u\|_{C^0(N)} \le C(N,q)\left\{\|u\|_{L^2(N)} + \|H_{\Psi_u}\circ\psi_u\|_{L^q(N)}\right\}, \qquad \forall q > \frac{n}{2}. \tag{5.13}$$

We now assume the strict stability of N, and use the formulas above in order to obtain a sharp quantitative estimates for *Lipschitz* graphs which only involves a very weak notion of deficit.

Theorem 5.1 (Weak-deficit estimate on Lipschitz graphs)**.** *Let N be a smooth compact orientable n-dimensional surface in $\mathbb{R}^{n+1}$ with boundary, and let $u : N \to \mathbb{R}$ be a Lipschitz function with $u = 0$ on ∂N. Consider the almost-mean curvature deficit*

$$\delta(u) := \sup\Big\{\int_N \frac{d}{dt}\Big|_{t=0} \mathbf{J}^N\psi_{u+t\varphi} : \int_N |\nabla\varphi|^2 \le 1\,, \varphi\in H^1_0(N)\Big\}.$$

If $H_N \equiv 0$ and N is strictly stable, in the sense that, for some $\lambda > 0$,

$$\int_N |\nabla\varphi|^2 - |A_N|^2\varphi^2 \ge \lambda\int_N \varphi^2 \qquad \forall\varphi\in H^1_0(N)\,,$$

then there exist positive constants ε and C depending on N such that the condition

$$\|u\|_{C^0(N)} + \mathrm{Lip}(u) \le \varepsilon \tag{5.14}$$

implies

$$0 \le \mathcal{H}^n(\Psi_u) - \mathcal{H}^n(N) \le C(N)\,\delta(u)^2\,, \tag{5.15}$$

$$\|u\|_{H^1(N)} \le C(N)\,\delta(u)\,. \tag{5.16}$$

In particular, if Ψ_u has a distributional mean curvature $H_{\Psi_u}\in L^2(\Psi_u)$, then

$$0 \le \mathcal{H}^n(\Psi_u) - \mathcal{H}^n(N) \le C(N)\int_{\Psi_u} |H_{\Psi_u}|^2\,, \tag{5.17}$$

and if $H_{\Psi_u}\in L^q(\Psi_u)$ for some $q > n/2$, then

$$\|u\|_{C^0(N)} \le C(N,q)\left\{\|H_{\Psi_u}\|_{L^2(\Psi_u)} + \|H_{\Psi_u}\|_{L^q(\Psi_u)}\right\}. \tag{5.18}$$

Proof of Theorem 5.1. We first notice that if $H_{\Psi_u}\in L^2(\Psi_u)$, then

$$\delta(u)^2 \le C(N)\int_{\Psi_u} |H_{\Psi_u}|^2\,. \tag{5.19}$$

Indeed, by (5.4), by Hölder inequality and by the Poincaré inequality on N, if $\varphi\in C^1_c(N)$ and π_N is the normal projection over N, then

$$\begin{aligned}
\Big|\int_N \frac{d}{dt}\Big|_{t=0} J^N\psi_{u+t\varphi}\Big|^2 &= \Big|\int_N \varphi\left(H_{\Psi_u}\circ\psi_u\right)\mathbf{J}^N\psi_u\left(\nu_{\Psi_u}\circ\psi_u\right)\cdot\nu_N\Big|^2\\
&\le \int_N \varphi^2\,\mathbf{J}^N\psi_u\int_N\left(H_{\Psi_u}\circ\psi_u\right)^2\mathbf{J}^N\psi_u\\
&\le \|\mathbf{J}^N\psi_u\|_{C^0(N)}\,\frac{\int_N|\nabla\varphi^2|}{c(N)}\int_{\Psi_u}|H_{\Psi_u}|^2
\end{aligned}$$

so that (5.19) immediately follows. In particular, (5.17) is a consequence of (5.15), which we now prove. For the sake of clarity we shall first prove the theorem in the flat case when $\kappa_i \equiv 0$ for all $i = 1,\dots,n$, and thus N is an open bounded set with smooth boundary in some n-plane of $\mathbb{R}^{n+1}$.

The flat case: In this case we have

$$\delta(u) = \sup\Big\{\int_N \frac{\nabla u}{\sqrt{1+|\nabla u|^2}}\cdot\nabla\varphi : \int_N|\nabla\varphi|^2 \le 1\,, \varphi\in H^1_0(N)\Big\}.$$

Setting

$$f(t) := \mathcal{H}^n(\Psi_{t\,u}) = \int_N \sqrt{1+|t\,\nabla u|^2}\,,$$

we find

$$\mathcal{H}^n(\Psi_u) - \mathcal{H}^n(N) = \int_0^1 f'(t)\,dt = \int_0^1 t\,dt \int_N \frac{\nabla u}{\sqrt{1+|t\nabla u|^2}} \cdot \nabla u = a + b\,,$$

where, by definition,

$$\begin{aligned} a &:= \int_0^1 t\,dt \int_N \frac{\nabla u}{\sqrt{1+|\nabla u|^2}} \cdot \nabla u\,, \\ b &:= \int_0^1 t\,dt \int_N \Big\{ \frac{1}{\sqrt{1+|t\nabla u|^2}} - \frac{1}{\sqrt{1+|\nabla u|^2}} \Big\} |\nabla u|^2\,. \end{aligned}$$

Clearly we have

$$0 \le a \le \frac{1}{2}\,\delta(u)\,\|\nabla u\|_{L^2(N)}\,.$$

Now consider the function $g(\xi) = (1+|\xi|^2)^{-1/2}$, so that

$$|\nabla g(\xi)| = \frac{|\xi|}{(1+|\xi|^2)^{3/2}} \le |\xi|\,,$$

and thus, for every $t \in [0,1]$ and $|\xi| \le 1$,

$$|g(t\xi) - g(\xi)| = \Big| \int_t^1 \nabla g(s\xi) \cdot \xi\,ds \Big| \le \frac{|\xi|^2}{2}\,.$$

This implies that

$$|b| \le \int_0^1 t\,dt \int_N |\nabla u|^4 \le \mathrm{Lip}(u)^2 \int_N |\nabla u|^2\,.$$

So far we have proved

$$0 \le \mathcal{H}^n(\Psi_u) - \mathcal{H}^n(N) \le \delta(u)\,\|\nabla u\|_{L^2(N)} + \mathrm{Lip}(u)^2 \int_N |\nabla u|^2\,.$$

We now notice that

$$\sqrt{1+|\nabla u|^2} - 1 = \frac{|\nabla u|^2}{1+\sqrt{1+|\nabla u|^2}} \ge \frac{|\nabla u|^2}{3}\,,$$

since $\mathrm{Lip}(u) \le \varepsilon \le 1$ (this last inequality expresses the strict stability of N). In particular,

$$\Big(\frac{1}{3} - \varepsilon^2\Big) \int_N |\nabla u|^2 \le \delta(u)\,\|\nabla u\|_{L^2(N)}\,,$$

that is

$$\Big(\frac{1}{3} - \varepsilon^2\Big)^2 \int_N |\nabla u|^2 \le \delta(u)^2\,.$$

Since we also have $\sqrt{1+|\xi|^2} - 1 \le |\xi|^2$ we finally conclude that

$$\Big(\frac{1}{3} - \varepsilon^2\Big) \Big\{ \mathcal{H}^n(\Psi_u) - \mathcal{H}^n(N) \Big\} \le \delta(u)^2\,.$$

This proves the theorem in the flat case.

The general case: Our starting point is again the obvious remark that

$$\begin{aligned}\mathcal{H}^n(\Psi_u) - \mathcal{H}^n(N) &= \int_0^1 \frac{d}{dt}\mathcal{H}^n(\Psi_{tu})\,dt = \int_0^1 \frac{d}{ds}\bigg|_{s=0} \mathcal{H}^n(\Psi_{t\,u+s\,u})\,dt \\ &= \int_0^1 dt \int_N \frac{d}{ds}\bigg|_{s=0} \mathbf{J}^N \psi_{t\,u+s\,u}\,. \end{aligned} \tag{5.20}$$

We recall that, by (5.7), with an open set A as described at the beginning of the section and for every $\varphi \in C^1_c(N)$, it holds

$$\frac{d}{ds}\bigg|_{s=0} \mathbf{J}^N \psi_{u+s\varphi} = \frac{\partial G}{\partial z}(p,u,Du)\varphi + \sum_{i=1}^n \frac{\partial G}{\partial \xi^i}(p,u,Du)\partial_i\varphi \qquad \text{on } A\cap N\,.$$

With reference to (5.20) we thus have, on $A \cap N$,

$$\frac{d}{ds}\bigg|_{s=0} \mathbf{J}^N \psi_{t\,u+s\,u} = \frac{\partial G}{\partial z}(p,t\,u,t\,Du)u + \sum_{i=1}^n \frac{\partial G}{\partial \xi^i}(p,t\,u,t\,Du)\partial_i u = R + t\,S \tag{5.21}$$

where we have set

$$\begin{aligned} R &= \Big\{\frac{\partial G}{\partial z}(p,t\,u,t\,Du) - t\,\frac{\partial G}{\partial z}(p,u,Du)\Big\}\,u \\ &\quad + \sum_{i=1}^n \Big\{\frac{\partial G}{\partial \xi^i}(p,t\,u,t\,Du) - t\,\frac{\partial G}{\partial \xi^i}(p,u,Du)\Big\}\cdot\partial_i u\,, \end{aligned}$$

and

$$S = \frac{\partial G}{\partial z}(p,u,Du)\,u + \sum_{i=1}^n \frac{\partial G}{\partial \xi^i}(p,u,Du)\cdot\partial_i u = \frac{d}{ds}\bigg|_{s=0} \mathbf{J}^N \psi_{u+s\,u}\,. \tag{5.22}$$

We now claim that

$$|R| \le C(N)\,\varepsilon\,(u^2 + |\nabla u|^2) \qquad \text{on } A\cap N\,. \tag{5.23}$$

Notice that the right-hand side of (5.23) is independent from the embedding F, indeed $|\nabla u|^2 = \sum_{i=1}^n (\partial_i u)^2 = |Du|^2$ is the squared norm of the tangential gradient of u. Analogously for the right-hand side of (5.22), so that we can combine (5.21), (5.22) and (5.23) to obtain

$$\frac{d}{ds}\bigg|_{s=0} \mathbf{J}^N \psi_{t\,u+s\,u} \le t\,\frac{d}{ds}\bigg|_{s=0} \mathbf{J}^N \psi_{u+s\,u} + \varepsilon\,C(N)\,(u^2 + |\nabla u|^2) \qquad \text{on } N\,, \tag{5.24}$$

from which we will easily conclude the proof; but we first prove (5.23). We start by using (5.9) to compute

$$\begin{aligned} &\sum_{i=1}^n \Big\{\frac{\partial G}{\partial \xi^i}(p,t\,u,t\,Du) - t\,\frac{\partial G}{\partial \xi^i}(p,u,Du)\Big\}\partial_i u \\ = \;& \big(g(p,t\,u,t\,Du) - g(p,u,Du)\big)\sum_{i=1}^n \frac{t(\partial_i u)^2}{(1+t\,\kappa_i u)^2} \\ &+ g(p,u,Du)\sum_{i=1}^n \Big(\frac{t}{(1+t\kappa_i u)^2} - \frac{t}{(1+\kappa_i u)^2}\Big)\,(\partial_i u)^2\,, \end{aligned}$$

where

$$\big|g(p,tu,t\,Du) - g(p,u,Du)\big| \le C(N)\,(1-t)\,\big(|u| + |\nabla u|\big)\,,$$

and where, recalling $H_N = 0$ and $0 \le t \le 1$, we get

$$\Big|\sum_{i=1}^n \frac{t}{(1+t\kappa_i u)^2} - \frac{t}{(1+\kappa_i u)^2}\Big| \le C(N)\, u^2\,.$$

Hence we obtain

$$\begin{aligned}\Big|\sum_{i=1}^n \Big\{\frac{\partial G}{\partial \xi^i}(p, t\,u, t\,Du) - t\,\frac{\partial G}{\partial \xi^i}(p,u,Du)\Big\}\partial_i u\Big| &\le C(N)\,|\nabla u|^2\,(|u| + |\nabla u|)\\ &\le C(N)\,\varepsilon\,|\nabla u|^2\,. \end{aligned} \tag{5.25}$$

In order to bound

$$\Big\{\frac{\partial G}{\partial z}(p, t\,u, t\,Du) - t\,\frac{\partial G}{\partial z}(p,u,Du)\Big\}\,u\,,$$

we set $h(p,z,\xi) = (\partial G/\partial z)(p,z,\xi)$ and use (5.10) to find

$$h(p,0,0) = G(p,0,0)\sum_{j=1}^n \kappa_j = H_N = 0\,,$$

and thus

$$\begin{aligned} h(p,t\,u,t\,Du) - t\,h(p,u,Du) &= \frac{\partial h}{\partial z}(p,0,0)\,(tu) + t\sum_{i=1}^n \frac{\partial h}{\partial \xi^i}(p,0,0)\,\partial_i u\\ &\quad -t\,\frac{\partial h}{\partial z}(p,0,0)u - t\sum_{i=1}^n \frac{\partial h}{\partial \xi^i}(p,0,0)\,\partial_i u\\ &\quad +\mathrm{O}(u^2 + |\nabla u|^2) = \mathrm{O}(u^2 + |\nabla u|^2)\,. \end{aligned}$$

Combined with $\|u\|_{C^0(N)} \le \varepsilon$ and with (5.25), this estimate proves (5.23).

Having proved (5.24), we now complete the proof as follows. By (5.20),

$$\begin{aligned} \mathcal{H}^n(\Psi_u) - \mathcal{H}^n(N) &\le \int_0^1 dt \int_N t\,\frac{d}{ds}\Big|_{s=0} \mathbf{J}^N \psi_{u+s\,u} + C(N)\,\varepsilon\,(u^2 + |\nabla u|^2)\\ &\le \delta(u)\,\|\nabla u\|_{L^2(N)} + C(N)\,\varepsilon\int_N u^2 + |\nabla u|^2\\ &\le \delta(u)\,\|\nabla u\|_{L^2(N)} + C(N)\,\varepsilon\int_N |\nabla u|^2\,, \end{aligned} \tag{5.26}$$

where we have used (5.24), the definition of $\delta(u)$ and the Poincaré inequality on N. By the strict stability of N and thanks to a classical computation (see, e.g., [DPM14, Lemma 3.2]) we find

$$\mathcal{H}^n(\Psi_u) - \mathcal{H}^n(N) \ge \frac{1}{C(N)}\int_N |\nabla u|^2\,,$$

and we thus conclude that, if ε is suitably small,

$$\int_N |\nabla u|^2 \le C(N)\delta(u)\,\|\nabla u\|_{L^2(N)}\,,$$

that is

$$\int_N |\nabla u|^2 \le C(N)\,\delta(u)^2\,, \tag{5.27}$$

and (5.16) follows by combining (5.27) with the Poincaré inequality. Combining (5.26) with (5.27) we prove (5.15). To prove the C^0 estimate we combine (5.13), i.e.

$$\|u\|_{C^0(N)} \le C(N,q)\,\Big\{\|u\|_{L^2(N)} + \|H_{\Psi_u}\circ\psi_u\|_{L^q(N)}\Big\}\,,$$

with (5.16), (5.19) and the area formula. This completes the proof of the theorem. □

References

[ABP17] S. Amato, G. Bellettini, and M. Paolini. Constrained BV functions on covering spaces for minimal networks and Plateau's type problems. *Adv. Calc. Var.*, 10(1):25–47, 2017. ISSN 1864-8258. URL https://doi-org.ezproxy.lib.utexas.edu/10.1515/acv-2015-0021.

[All72] W. K. Allard. On the first variation of a varifold. *Ann. Math.*, 95:417–491, 1972.

[All75] W. K. Allard. On the first variation of a varifold: boundary behaviour. *Ann. Math.*, 101: 418–446, 1975.

[BC84] H. Brezis and J.-M. Coron. Multiple solutions of H-systems and Rellich's conjecture. *Comm. Pure Appl. Math.*, 37(2):149–187, 1984. ISSN 0010-3640. URL http://dx.doi.org/10.1002/cpa.3160370202.

[CDTR+17] C. Cohen, B. Darbois Texier, E. Reyssat, J. H. Snoeijer, D. Quéré, and C. Clanet. On the shape of giant soap bubbles. *Proceedings of the National Academy of Sciences*, 114(10):2515–2519, 2017. ISSN 0027-8424. URL http://www.pnas.org/content/114/10/2515.

[CLM16] M. Cicalese, G. P. Leonardi, and F. Maggi. Improved convergence theorems for bubble clusters I. The planar case. *Indiana Univ. Math. J.*, 65(6):1979–2050, 2016. ISSN 0022-2518. URL https://doi.org/10.1512/iumj.2016.65.5932.

[CM17] G. Ciraolo and F. Maggi. On the shape of compact hypersurfaces with almost-constant mean curvature. *Comm. Pure Appl. Math.*, 70(4):665–716, 2017. ISSN 0010-3640. URL http://dx.doi.org/10.1002/cpa.21683.

[Dav14] G. David. Should we solve Plateau's problem again? In *Advances in analysis: the legacy of Elias M. Stein*, volume 50 of *Princeton Math. Ser.*, pages 108–145. Princeton Univ. Press, Princeton, NJ, 2014.

[DF90] F. Duzaar and M. Fuchs. On the existence of integral currents with prescribed mean curvature vector. *Manuscripta Math.*, 67(1):41–67, 1990. ISSN 0025-2611. URL https://doi-org.ezproxy.lib.utexas.edu/10.1007/BF02568422.

[DF92] F. Duzaar and M. Fuchs. A general existence theorem for integral currents with prescribed mean curvature form. *Boll. Un. Mat. Ital. B (7)*, 6(4):901–912, 1992.

[dGBWQ03] P.-G. de Gennes, F. Brochard-Wyart, and D. Quéré. *Capillarity and wetting phenomena.* Springer, 2003. xv+291 pp. Translated by A. Reisinger.

[DLDRG17] C. De Lellis, A. De Rosa, and F. Ghiraldin. A direct approach to the anisotropic plateau problem. *Adv. Calc. Var.*, 2017.

[DLGM17] C. De Lellis, F. Ghiraldin, and F. Maggi. A direct approach to Plateau's problem. *J. Eur. Math. Soc. (JEMS)*, 19(8):2219–2240, 2017. ISSN 1435-9855. URL https://doi-org.ezproxy.lib.utexas.edu/10.4171/JEMS/716.

[DM17] M. G. Delgadino and F. Maggi. Alexandrov's theorem revisited. 2017. Preprint arXiv:1711.07690.

[DMMN17] M. G. Delgadino, F. Maggi, C. Mihaila, and R. Neumayer. Bubbling with L^2-almost constant mean curvature and an Alexandrov-type theorem for crystals. 2017. Preprint arXiv:1705.10117, to appear on Arch. Rat. Mech. Anal.

[DP66] R. Defay and I. Prigogine. *Surface tension and adsorption.* John Wiley and sons, Inc., New York, NY, 1966. xxxii+432 pp. Translated by D. G. Everett.

[DPDRG16] G. De Philippis, A. De Rosa, and F. Ghiraldin. A direct approach to Plateau's problem in any codimension. *Adv. Math.*, 288:59–80, 2016. ISSN 0001-8708. URL https://doi-org.ezproxy.lib.utexas.edu/10.1016/j.aim.2015.10.007.

[DPM14] G. De Philippis and F. Maggi. Sharp stability inequalities for the Plateau problem. *J. Differential Geom.*, 96(3):399–456, 2014.

[DR16] C. De Lellis and J. Ramic. Min-max theory for minimal hypersurfaces with boundary. 2016. URL https://arxiv.org/abs/1611.00926. Preprint arXiv:1611.00926, to appear in Jour. Ann. Inst. Fourier.

[DR18] A. De Rosa. Minimization of anisotropic energies in classes of rectifiable varifolds. *SIAM J. Math. Anal.*, 50(1):162–181, 2018. ISSN 0036-1410. URL https://doi-org.ezproxy.lib.utexas.edu/10.1137/17M1112479.

[FF60] H. Federer and W. H. Fleming. Normal and integral currents. *Ann. of Math. (2)*, 72:458–520, 1960. ISSN 0003-486X. URL https://doi-org.ezproxy.lib.utexas.edu/10.2307/1970227.

[FK18] Y. Fang and S. Kolasinski. Existence of solutions to a general geometric elliptic variational problem. *Calc. Var. Partial Differential Equations*, 57(3):57:91, 2018. ISSN 0944-2669. URL https://doi-org.ezproxy.lib.utexas.edu/10.1007/s00526-018-1348-4.

[FM11] A. Figalli and F. Maggi. On the shape of liquid drops and crystals in the small mass regime. *Arch. Rat. Mech. Anal.*, 201:143–207, 2011.

[Gau30] C. F. Gauss. Principia generalia theoriae figurae fluidorum. *Comment. Soc. Regiae Scient. Gottingensis Rec.*, (7), 1830.

[Giu03] E. Giusti. *Direct methods in the calculus of variations*. World Scientific Publishing Co., Inc., River Edge, NJ, 2003. ISBN 981-238-043-4. viii+403 pp. URL `https://doi-org.ezproxy.lib.utexas.edu/10.1142/9789812795557`.

[GLF17] G. G. Giusteri, L. Lussardi, and E. Fried. Solution of the Kirchhoff-Plateau problem. *J. Nonlinear Sci.*, 27(3):1043–1063, 2017. ISSN 0938-8974. URL `https://doi-org.ezproxy.lib.utexas.edu/10.1007/s00332-017-9359-4`.

[GT98] D. Gilbarg and N. S. Trudinger. *Elliptic partial differential equations of second order*. Springer, Berlin; New York, 1998. xiii+517 pp.

[Har04] J. Harrison. On Plateau's problem for soap films with a bound on energy. *J. Geom. Anal.*, 14(2):319–329, 2004. ISSN 1050-6926. URL `https://doi-org.ezproxy.lib.utexas.edu/10.1007/BF02922075`.

[HP16] J. Harrison and H. Pugh. Existence and soap film regularity of solutions to Plateau's problem. *Adv. Calc. Var.*, 9(4):357–394, 2016. ISSN 1864-8258. URL `https://doi-org.ezproxy.lib.utexas.edu/10.1515/acv-2015-0023`.

[Hui89] G. Huisken. Nonparametric mean curvature evolution with boundary conditions. *J. Differential Equations*, 77(2):369–378, 1989. ISSN 0022-0396. URL `https://doi-org.ezproxy.lib.utexas.edu/10.1016/0022-0396(89)90149-6`.

[KM17] B. Krummel and F. Maggi. Isoperimetry with upper mean curvature bounds and sharp stability estimates. *Calc. Var. Partial Differential Equations*, 56(2):Art. 53, 43, 2017. ISSN 0944-2669. URL `https://doi-org.ezproxy.lib.utexas.edu/10.1007/s00526-017-1139-3`.

[Lap06] P. S. Laplace. *Mécanique céleste*. 1806. suppl. 10th volume.

[LM17] G. P. Leonardi and F. Maggi. Improved convergence theorems for bubble clusters II. The three-dimensional case. *Indiana Univ. Math. J.*, 66(2):559–608, 2017.

[Sch04] R. Schätzle. Quadratic tilt-excess decay and strong maximum principle for varifolds. *Ann. Sc. Norm. Super. Pisa Cl. Sci. (5)*, 3(1):171–231, 2004. ISSN 0391-173X.

[Sim83] L. Simon. *Lectures on geometric measure theory*, volume 3 of *Proceedings of the Centre for Mathematical Analysis*. Australian National University, Centre for Mathematical Analysis, Canberra, 1983. vii+272 pp.

[Spr07] J. Spruck. Interior gradient estimates and existence theorems for constant mean curvature graphs in $M^n \times \mathbf{R}$. *Pure Appl. Math. Q.*, 3(3, Special Issue: In honor of Leon Simon. Part 2): 785–800, 2007. ISSN 1558-8599. URL `https://doi-org.ezproxy.lib.utexas.edu/10.4310/PAMQ.2007.v3.n3.a6`.

[Str84] M. Struwe. A global compactness result for elliptic boundary value problems involving limiting nonlinearities. *Math. Z.*, 187(4):511–517, 1984. ISSN 0025-5874. URL `http://dx.doi.org/10.1007/BF01174186`.

[Whi09] B. White. Currents and flat chains associated to varifolds, with an application to mean curvature flow. *Duke Math. J.*, 148(1):41–62, 2009. ISSN 0012-7094. URL `https://doi.org/10.1215/00127094-2009-019`.

[You05] T. Young. An essay on the cohesion of fluids. *Philos. Trans. Roy. Soc. London*, (95):65–87, 1805.

(Francesco Maggi)
Department of Mathematics, University of Texas at Austin,
2515 Speedway STOP C1200, 78712, Austin, Texas, USA
Email address: `maggi@math.utexas.edu`

(Antonello Scardicchio)
International Centre for Theoretical Physics,
Strada Costiera 11, 34151, Trieste, Italy
Email address: `ascardic@ictp.it`

(Salvatore Stuvard)
Department of Mathematics, University of Texas at Austin,
2515 Speedway STOP C1200, 78712, Austin, Texas, USA
Email address: `stuvard@math.utexas.edu`